A Comprehensive Technical Guide to 3-Bromo-2,4-dichloropyridine

Author: BenchChem Technical Support Team. **Date**: May 2026

Compound of Interest

Compound Name:	*3-Bromo-2,4-dichloropyridine*
CAS No.:	*144584-32-7*
Cat. No.:	*B186617*

Get Quote

For Researchers, Scientists, and Drug Development Professionals

This document serves as an in-depth technical resource on **3-Bromo-2,4-dichloropyridine**, a halogenated pyridine derivative of significant interest in synthetic organic chemistry and pharmaceutical development. It details the compound's core physicochemical properties, synthesis, reactivity, and applications, providing both theoretical understanding and practical methodologies grounded in scientific literature.

Core Properties: Molecular Weight and Formula

A precise understanding of a compound's molecular identity is fundamental to its application in research and development. **3-Bromo-2,4-dichloropyridine** is a substituted pyridine, a structural motif frequently encountered in medicinal chemistry.

An analysis of its atomic composition reveals the following key data:

© 2026 BenchChem. All rights reserved.

Table 1: Physicochemical Properties of **3-Bromo-2,4-dichloropyridine**

Property	Value
Molecular Formula	**C5H2BrCl2N**
Molecular Weight	226.89 g/mol
CAS Number	144584-32-7

These fundamental properties are essential for accurate stoichiometric calculations in reaction design and for the interpretation of analytical data, such as mass spectrometry.

Synthesis and Mechanistic Considerations

The synthesis of **3-Bromo-2,4-dichloropyridine** is typically achieved through the halogenation of a pyridine precursor. A prevalent and efficient method involves the electrophilic bromination of 2,4-dichloropyridine.

Recommended Synthetic Protocol: Electrophilic Bromination

This section outlines a standard laboratory procedure for the synthesis of **3-Bromo-2,4-dichloropyridine**, with explanations for the choice of reagents and conditions to provide a deeper mechanistic understanding.

Materials:

- 2,4-Dichloropyridine
- N-Bromosuccinimide (NBS)
- Concentrated Sulfuric Acid
- Dichloromethane (DCM)
- Saturated Sodium Bicarbonate Solution
- Anhydrous Sodium Sulfate
- Standard laboratory glassware and equipment

Step-by-Step Methodology:

© 2026 BenchChem. All rights reserved.

- Reaction Setup: Dissolve 2,4-dichloropyridine in a minimal amount of concentrated sulfuric acid within a round-bottom flask, with continuous stirring. The sulfuric acid serves as both a solvent and a protonating agent, thereby activating the pyridine ring for electrophilic attack.
- Reagent Addition: Introduce N-Bromosuccinimide (NBS) to the solution in portions. NBS is the preferred bromine source due to its ease of handling and its capacity to generate electrophilic bromine *in situ*. The reaction is generally conducted at ambient temperature.
- Reaction Monitoring: Monitor the reaction's progress using Thin Layer Chromatography (TLC) or Gas Chromatography-Mass Spectrometry (GC-MS) to confirm the complete consumption of the starting material.
- Workup: Upon completion, carefully pour the reaction mixture over crushed ice to quench the reaction and precipitate the product.
- Neutralization: Cautiously add a saturated solution of sodium bicarbonate to neutralize the acidic mixture until effervescence ceases.
- Extraction: Perform a liquid-liquid extraction of the aqueous layer using dichloromethane (3 x 50 mL). Combine the organic layers.
- Drying and Concentration: Dry the consolidated organic layers over anhydrous sodium sulfate, filter the drying agent, and remove the solvent under reduced pressure using a rotary evaporator to obtain the crude product.
- Purification: The crude **3-Bromo-2,4-dichloropyridine** can be purified by column chromatography on silica gel, eluting with a hexane/ethyl acetate gradient.

Reaction Mechanism Diagram

© 2026 BenchChem. All rights reserved.

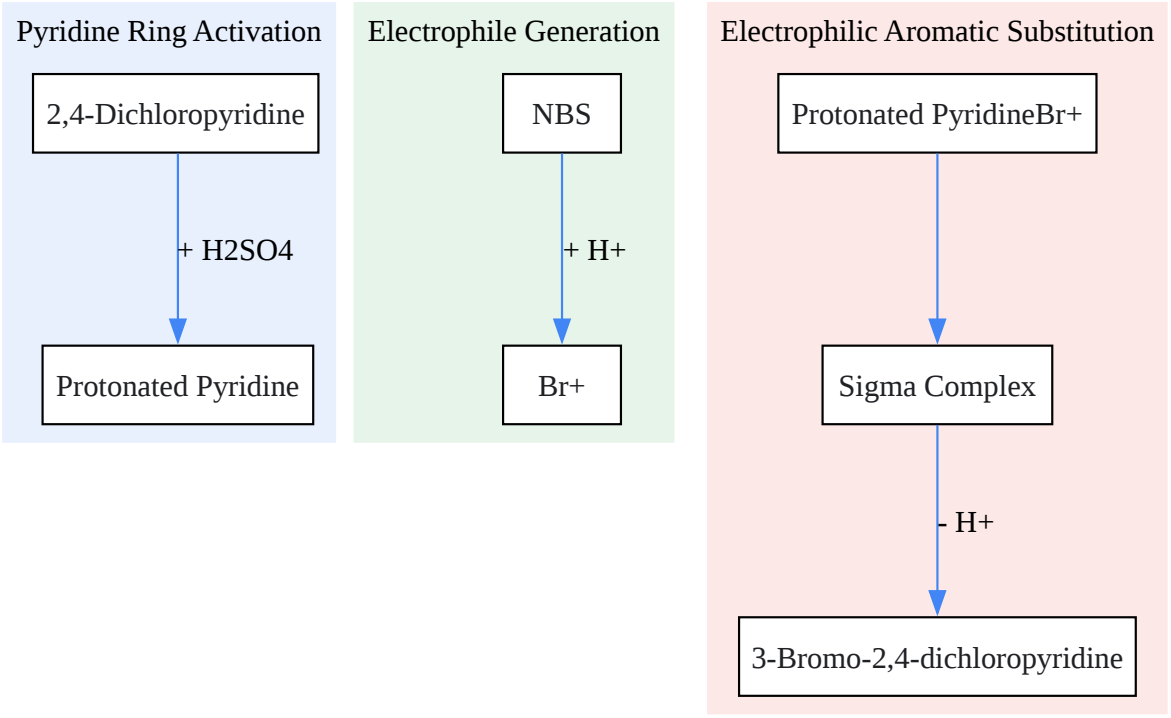

Click to download full resolution via product page

Figure 1: Electrophilic bromination of 2,4-dichloropyridine.

Applications in Drug Discovery and Organic Synthesis

3-Bromo-2,4-dichloropyridine is a versatile building block for synthesizing more complex molecules, especially within the pharmaceutical sector. The varied reactivity of its halogen substituents permits selective functionalization.

Cross-Coupling Reactions

The bromine and chlorine atoms on the pyridine ring can be selectively targeted in a variety of cross-coupling reactions, including Suzuki, Stille, and Buchwald-Hartwig couplings. This facilitates the introduction of diverse substituents, such as aryl, alkyl, and amino groups, thereby enabling the construction of molecular complexity.

© 2026 BenchChem. All rights reserved.

Table 2: Halogen Reactivity in Cross-Coupling Reactions

Halogen	Position	Relative Reactivity	Common Coupling Partners
Bromine	**3**	**High**	**Boronic acids, organostannanes**
Chlorine	2	Low	Amines (Buchwald-Hartwig)
Chlorine	4	Moderate	Boronic acids (under forcing conditions)

Case Study: Synthesis of a Kinase Inhibitor Precursor

A notable application of **3-Bromo-2,4-dichloropyridine** is in the synthesis of kinase inhibitors. The following workflow demonstrates a representative synthetic sequence.

© 2026 BenchChem. All rights reserved.

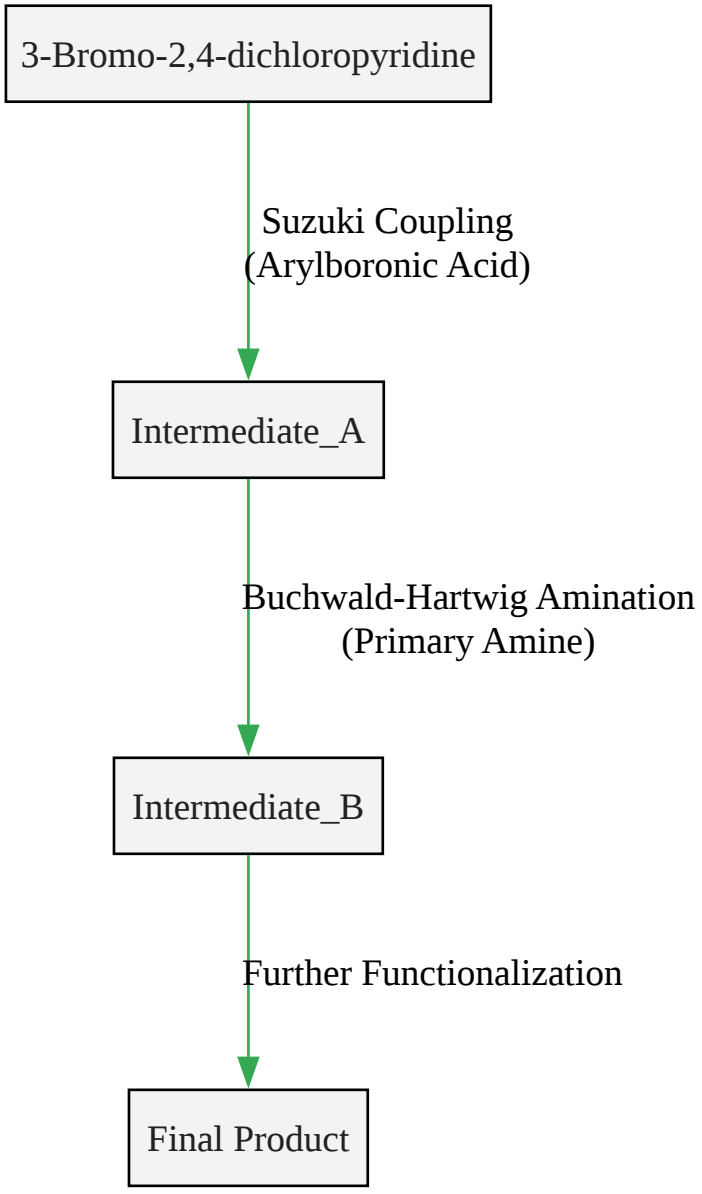

Click to download full resolution via product page

Figure 2: Synthetic workflow for a kinase inhibitor precursor.

This strategy of sequential cross-coupling reactions allows for the controlled and regioselective assembly of the target molecule, underscoring the value of **3-Bromo-2,4-dichloropyridine** as a pivotal synthetic intermediate.

Safety and Handling

© 2026 BenchChem. All rights reserved.

As with all halogenated organic compounds, **3-Bromo-2,4-dichloropyridine** must be handled with appropriate safety measures in a well-ventilated fume hood.

- Personal Protective Equipment (PPE): Always wear safety goggles, a laboratory coat, and chemical-resistant gloves.
- Inhalation: Avoid inhaling dust, fumes, gas, mist, vapors, or spray.
- Skin and Eye Contact: This compound is an irritant. In case of contact, immediately flush the affected area with copious amounts of water for at least 15 minutes.
- Storage: Store in a cool, dry, and well-ventilated area, segregated from incompatible materials.

It is imperative to consult the Safety Data Sheet (SDS) provided by the supplier for comprehensive and detailed safety information.

Conclusion

3-Bromo-2,4-dichloropyridine is a highly valuable and versatile reagent in the field of organic synthesis. Its well-characterized molecular weight and formula, in conjunction with the differential reactivity of its halogen substituents, establish it as an excellent starting material for the synthesis of complex molecular structures, particularly in the creation of novel pharmaceuticals. The synthetic protocols and mechanistic discussions presented in this guide are intended to equip researchers with the knowledge to utilize this compound effectively and safely in their scientific work.

References

- . (n.d.). Sigma-Aldrich.
- . (n.d.). PubChem.
- . (n.d.). iChemical.
- . (n.d.). Sunway Pharm Ltd.
- . (n.d.). BLD Pharm.

- To cite this document: BenchChem. [A Comprehensive Technical Guide to 3-Bromo-2,4-dichloropyridine]. BenchChem, [2026]. [Online PDF]. Available at: [https://www.benchchem.com/product/b186617/docs#a-comprehensive-technical-guide-to-3-bromo-2-4-dichloropyridine]

Disclaimer & Data Validity:

The information provided in this document is for Research Use Only (RUO) and is strictly not intended for diagnostic or therapeutic procedures. While BenchChem strives to provide accurate protocols, we make no warranties, express or implied, regarding the fitness of this product for every specific experimental setup.

Technical Support: The protocols provided are for reference purposes. Unsure if this reagent suits your experiment?

Need Industrial/Bulk Grade? Request Custom Synthesis Quote

BenchChem

Our mission is to be the trusted global source of essential and advanced chemicals, empowering scientists and researchers to drive progress in science and industry.

Contact

Address: 3281 E Guasti Rd

Ontario, CA 91761, United States

Phone: (601) 213-4426

Email: info@benchchem.com

Contact our Ph.D. Support Team for a compatibility check

© 2026 BenchChem. All rights reserved.