Application Note: Strategic Synthesis of DPP-4 Inhibitors Utilizing Chiral Pyrrolidine Scaffolds

Author: BenchChem Technical Support Team. **Date**: May 2026

Compound of Interest

Compound Name:	*3-Aminopyrrolidin-2-one hydrochloride*
CAS No.:	*117879-49-9*
Cat. No.:	*B177392*

Get Quote

Abstract

Dipeptidyl peptidase-4 (DPP-4) inhibitors are a cornerstone in the management of type 2 diabetes mellitus, with leading drugs like sitagliptin and vildagliptin demonstrating the critical role of chiral amine moieties in achieving high potency and selectivity.[1][2] The pyrrolidine ring, in particular, serves as a privileged scaffold, providing a rigid conformational lock to orient key binding groups into the S1 and S2 pockets of the DPP-4 enzyme.[3] This technical guide provides an in-depth exploration of synthetic strategies for constructing these vital chiral intermediates. While the direct incorporation of **3-aminopyrrolidin-2-one hydrochloride** into major approved DPP-4 inhibitors is not a principal route described in seminal literature, its structural relationship to key building blocks makes it a precursor of strategic interest. This document details established protocols for the synthesis of the crucial (R)-3-aminopyrrolidine intermediate and presents a validated, logical workflow for the conversion of the chiral lactam, 3-aminopyrrolidin-2-one, into this versatile building block, thereby enabling its application in novel DPP-4 inhibitor discovery programs.

© 2026 BenchChem. All rights reserved.

Introduction: The Architectural Significance of Chiral Amines in DPP-4 Inhibition

The therapeutic efficacy of DPP-4 inhibitors hinges on their ability to mimic the dipeptide substrate of the DPP-4 enzyme. This is typically achieved with a molecule comprising three key components:

- A Chiral Amine: This moiety, often a primary or secondary amine on a cyclic scaffold, anchors the inhibitor in the S2 pocket of the enzyme's active site.
- A "Warhead" Group: An electrophilic group, such as a nitrile or trifluoromethyl, that forms a reversible covalent or non-covalent interaction with a key serine residue (Ser630) in the S1 pocket.[4]
- A Lipophilic Side Chain: A larger, often aromatic or polycyclic group, that engages in hydrophobic interactions, enhancing binding affinity and modulating pharmacokinetic properties.

The precise stereochemistry of the chiral amine is paramount; for instance, the (R)-enantiomer of sitagliptin's β-amino acid core is essential for its inhibitory activity.[5] Consequently, robust and scalable methods for producing enantiomerically pure building blocks are critical for both laboratory-scale discovery and industrial-scale manufacturing.

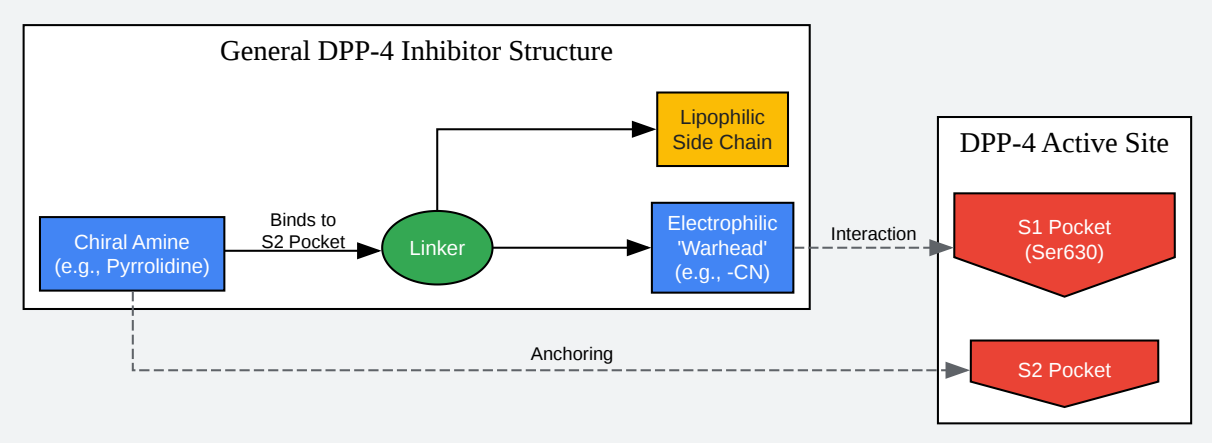

© 2026 BenchChem. All rights reserved.

Click to download full resolution via product page

Figure 1: General pharmacophore model for DPP-4 inhibitors.

Synthesis of the (R)-3-Aminopyrrolidine Scaffold: Core Protocols

The enantiomerically pure 3-aminopyrrolidine scaffold is a versatile intermediate for a wide range of DPP-4 inhibitors. Two primary strategies for its preparation are chiral resolution and asymmetric synthesis.

Protocol 2.1: Enantiomeric Resolution of Racemic 3-Aminopyrrolidine

This classical approach relies on the separation of diastereomeric salts formed by reacting the racemic amine with a chiral resolving agent.[6] The differential solubility of these salts allows for their separation by fractional crystallization.

Table 1: Reagents and Materials for Chiral Resolution

© 2026 BenchChem. All rights reserved.

Reagent/Material	Grade	Supplier	Purpose
Racemic N-Boc-3-aminopyrrolidine	≥98%	Commercial	Starting material
L-(+)-Tartaric acid	≥99.5%	Commercial	Chiral resolving agent
Methanol	Anhydrous	Commercial	Crystallization solvent
2 M Sodium Hydroxide (NaOH)	ACS Grade	In-house prep.	Basification to liberate free amine
Dichloromethane (DCM)	ACS Grade	Commercial	Extraction solvent
Anhydrous Magnesium Sulfate ($MgSO_4$)	ACS Grade	Commercial	Drying agent
Trifluoroacetic acid (TFA)	Reagent Grade	Commercial	Boc deprotection

Step-by-Step Procedure:

- Salt Formation: Dissolve racemic N-Boc-3-aminopyrrolidine (1.0 eq) in methanol (5-10 volumes) with gentle warming. In a separate flask, dissolve L-(+)-tartaric acid (0.5 eq) in a minimum amount of warm methanol.
- Crystallization: Add the tartaric acid solution to the amine solution. Allow the mixture to cool slowly to room temperature, then place it in a 4°C refrigerator overnight to facilitate crystallization of the diastereomeric salt.
- Isolation: Collect the crystals by vacuum filtration and wash with a small amount of cold methanol. The less soluble (R)-amine-(L)-tartrate salt typically crystallizes first.
- Liberation of Free Amine: Suspend the collected crystals in a biphasic mixture of water and dichloromethane. Adjust the pH of the aqueous layer to >11 with 2 M NaOH.
- Extraction & Deprotection: Separate the layers and extract the aqueous phase twice more with dichloromethane. Combine the organic layers, dry over anhydrous $MgSO_4$, filter, and

© 2026 BenchChem. All rights reserved.

concentrate under reduced pressure to yield N-Boc-(R)-3-aminopyrrolidine. This protected intermediate can then be deprotected by treatment with trifluoroacetic acid in dichloromethane to yield the final product.[7]

Causality Note: The choice of L-(+)-tartaric acid is based on its ability to form well-defined, crystalline salts with amines. The 0.5 equivalence is used because tartaric acid is diprotic and the amine is monoprotic, targeting the formation of the bitartrate salt. Slow cooling is crucial for selective crystallization and achieving high diastereomeric excess.

Protocol 2.2: Asymmetric Synthesis from trans-4-Hydroxy-L-proline

A more elegant and atom-economical approach is the asymmetric synthesis starting from a readily available chiral pool material. This route involves a key stereochemical inversion step.[8]

© 2026 BenchChem. All rights reserved.

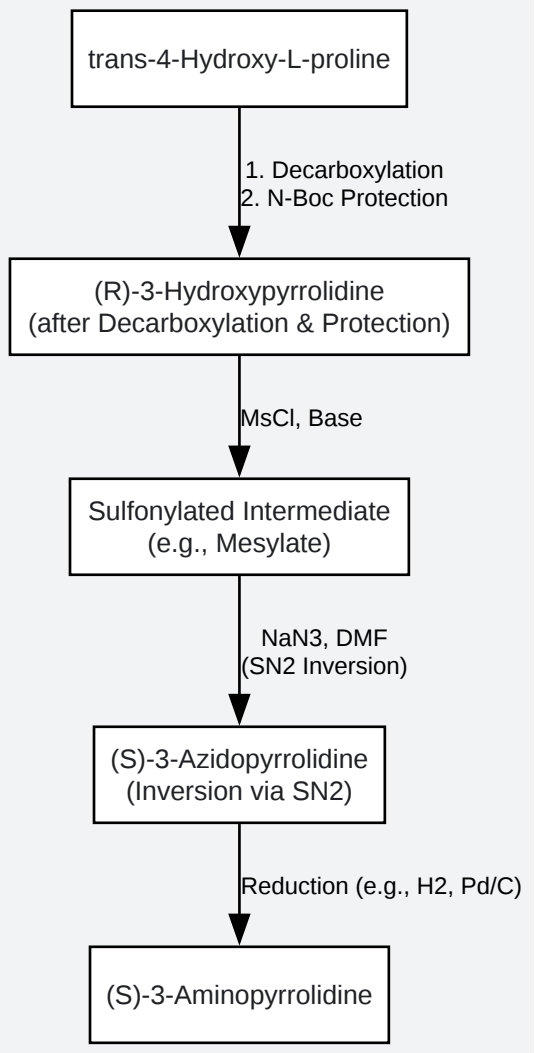

Click to download full resolution via product page

Figure 2: Workflow for asymmetric synthesis of (S)-3-aminopyrrolidine.

Step-by-Step Procedure:

- Decarboxylation & Protection: Start with trans-4-hydroxy-L-proline. Perform decarboxylation followed by N-protection of the secondary amine with a Boc group to yield N-Boc-(R)-3-hydroxypyrrolidine.[8]
- Hydroxyl Activation: Activate the hydroxyl group as a good leaving group by reacting the alcohol with methanesulfonyl chloride (MsCl) in the presence of a non-nucleophilic base like triethylamine (TEA) in dichloromethane. This forms the mesylate.

© 2026 BenchChem. All rights reserved.

- SN2 Azide Displacement: Displace the mesylate with sodium azide (NaN_3) in a polar aprotic solvent such as DMF. This nucleophilic substitution proceeds via an S_n2 mechanism, resulting in an inversion of stereochemistry to give N-Boc-(S)-3-azidopyrrolidine.

- Azide Reduction: Reduce the azide group to a primary amine. This is cleanly achieved by catalytic hydrogenation (H_2, 10% Pd/C in methanol) or by using triphenylphosphine followed by hydrolysis (Staudinger reduction).[8]

- Deprotection: Remove the Boc protecting group with HCl in dioxane or TFA in DCM to afford (S)-3-aminopyrrolidine hydrochloride.

Causality Note: The key to this synthesis is the S_n2 reaction in step 3. The conversion of the hydroxyl group into a mesylate makes it an excellent leaving group, facilitating the backside attack by the azide nucleophile. This ensures a clean and high-fidelity inversion of the stereocenter, transforming the (R)-alcohol into the (S)-amine configuration.

Application Protocol: Converting (R)-3-Aminopyrrolidin-2-one to a DPP-4 Inhibitor Intermediate

While not a direct precursor for sitagliptin, the chiral lactam (R)-3-aminopyrrolidin-2-one can be strategically converted into (R)-3-aminopyrrolidine, a valuable building block. This involves protection of the exocyclic amine followed by reduction of the lactam's amide bond.

© 2026 BenchChem. All rights reserved.

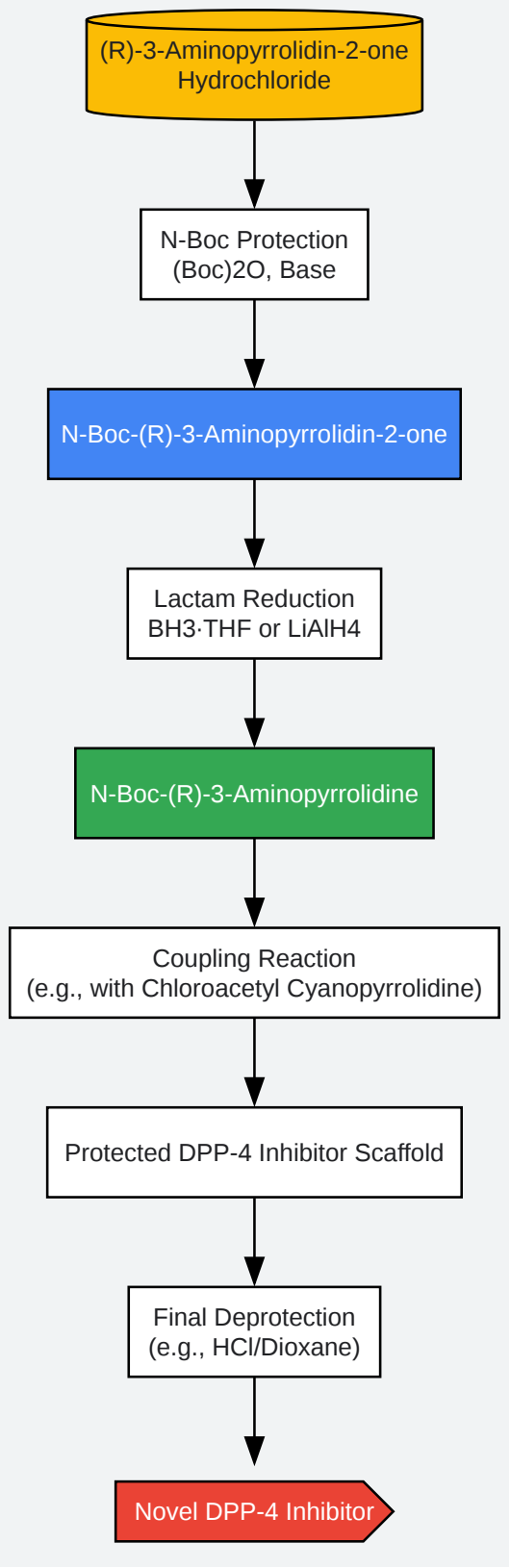

Click to download full resolution via product page

© 2026 BenchChem. All rights reserved.

Need Custom Synthesis?

BenchChem offers custom synthesis for rare earth carbides and specific isotopiclabeling.

Email: info@benchchem.com or Request Quote Online.

Sources

- 1. Discovery and development of dipeptidyl peptidase-4 inhibitors - Wikipedia [en.wikipedia.org]
- 2. Synthesis of New DPP-4 Inhibitors Based on a Novel Tricyclic Scaffold - PMC [pmc.ncbi.nlm.nih.gov]
- 3. Insight into Structure Activity Relationship of DPP-4 Inhibitors for Development of Antidiabetic Agents - PMC [pmc.ncbi.nlm.nih.gov]
- 4. Synthetic Approaches to Novel DPP-IV Inhibitors—A Literature Review - PMC [pmc.ncbi.nlm.nih.gov]
- 5. d-nb.info [d-nb.info]
- 6. Chiral resolution - Wikipedia [en.wikipedia.org]
- 7. benchchem.com [benchchem.com]
- 8. CN102531987A - Synthesis method of (S)-3-amino pyrrolidine dihydrochloride - Google Patents [patents.google.com]
- To cite this document: BenchChem. [Application Note: Strategic Synthesis of DPP-4 Inhibitors Utilizing Chiral Pyrrolidine Scaffolds]. BenchChem, [2026]. [Online PDF]. Available at: [https://www.benchchem.com/product/b177392/docs#application-note-strategic-synthesis-of-dpp-4-inhibitors-utilizing-chiral-pyrrolidine-scaffolds]

Disclaimer & Data Validity:

The information provided in this document is for Research Use Only (RUO) and is strictly not intended for diagnostic or therapeutic procedures. While BenchChem strives to provide accurate protocols, we make no warranties, express or implied, regarding the fitness of this product for every specific experimental setup.

Technical Support: The protocols provided are for reference purposes. Unsure if this reagent suits your experiment?

© 2026 BenchChem. All rights reserved.

Need Industrial/Bulk Grade? Request Custom Synthesis Quote

BenchChem

Our mission is to be the trusted global source of essential and advanced chemicals, empowering scientists and researchers to drive progress in science and industry.

Contact

Address: 3281 E Guasti Rd

Ontario, CA 91761, United States

Phone: (601) 213-4426

Email: info@benchchem.com

Contact our Ph.D. Support Team for a compatibility check

© 2026 BenchChem. All rights reserved.