Biological Activity Profile: 4-Propoxybenzenesulfonamide

Author: BenchChem Technical Support Team. **Date**: May 2026

Compound of Interest

Compound Name:	*4-Propoxybenzenesulfonamide*
CAS No.:	*1135-01-9*
Cat. No.:	*B174123*

Get Quote

Executive Summary

4-Propoxybenzenesulfonamide (4-PBSA) is a primary sulfonamide and a potent, competitive inhibitor of the zinc-metalloenzyme superfamily Carbonic Anhydrases (CAs). Unlike first-generation inhibitors (e.g., acetazolamide) which are hydrophilic and systemically distributed, 4-PBSA incorporates a hydrophobic n-propoxy "tail." This structural modification utilizes the "tail approach" to drug design, enhancing interaction with the hydrophobic pocket of the CA active site.

This guide details the biological activity of 4-PBSA, focusing on its utility as a probe for probing isoform selectivity (specifically hCA I, II, IX, and XII) and its physicochemical properties that favor topical delivery in antiglaucoma research.

Chemical Identity & Physicochemical Properties

Understanding the amphiphilic nature of 4-PBSA is critical for experimental design. The propoxy group increases logP compared to the parent benzenesulfonamide, facilitating membrane permeability—a key factor for corneal penetration in glaucoma models.

© 2026 BenchChem. All rights reserved.

Property	Value / Description	Experimental Implication
IUPAC Name	4-Propoxybenzenesulfonamide	Standard nomenclature for procurement.
Molecular Formula	$C_9H_{13}NO_3S$	MW: 215.27 g/mol .[1]
Functional Motif	Primary Sulfonamide (-SO_2NH_2)	Critical: Must remain unsubstituted for Zn^{2+} binding.
Hydrophobic Tail	n-Propoxy (-O-CH_2-CH_2-CH_3)	Probes the hydrophobic half of the CA active site.
Solubility	DMSO (>10 mM), Ethanol	Avoid aqueous stock solutions; precipitation risk >100 µM.
pKa (Sulfonamide)	~10.1	At physiological pH (7.4), the neutral form predominates, aiding transport.

Mechanism of Action: Zinc Coordination & The "Tail Approach"

The Canonical Inhibition Mechanism

The biological activity of 4-PBSA is driven by the coordination of the deprotonated sulfonamide nitrogen to the catalytic Zinc ion (Zn^{2+}) within the enzyme's active site.

- Displacement: The sulfonamide anion (R-SO_2NH^-) displaces the zinc-bound water molecule/hydroxide ion (Zn^{2+}-OH^-), which is the catalytic nucleophile for CO_2 hydration.
- Coordination: The nitrogen atom forms a tetrahedral geometry with the Zn^{2+} ion.
- Stabilization: The oxygen atoms of the sulfonamide moiety participate in hydrogen bonding with the Thr199 residue (in hCA II), stabilizing the complex.

The Hydrophobic Interaction (The "Tail")

The distinct advantage of 4-PBSA over simple benzenesulfonamide lies in the 4-propoxy chain. The CA active site is divided into a hydrophilic half (Zn^{2+} region) and a hydrophobic half.

© 2026 BenchChem. All rights reserved.

- The propoxy tail extends into the hydrophobic pocket (lined by residues Val121, Leu198, and Trp209 in hCA II).
- Van der Waals contacts between the propyl chain and these residues increase binding affinity (lower

) compared to shorter tails (e.g., methoxy).

Visualization: Mechanism of Action

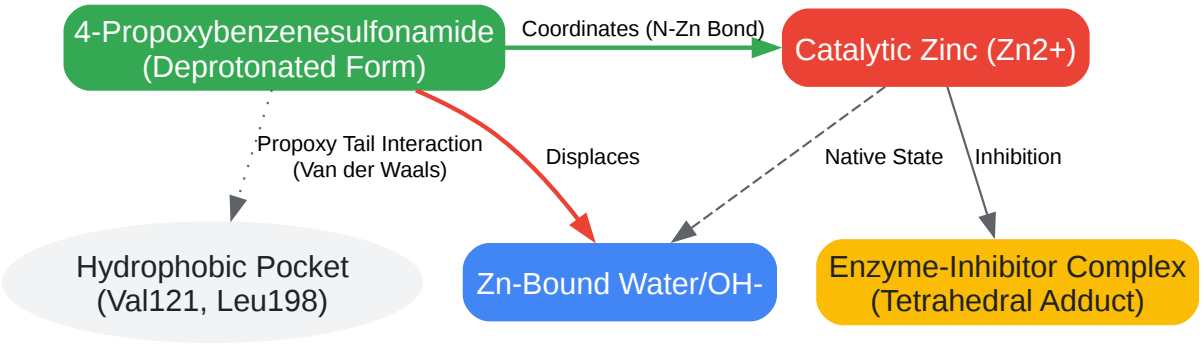

Click to download full resolution via product page

Caption: Schematic of 4-PBSA displacing the catalytic water molecule and engaging the hydrophobic pocket.

Biological Data & Therapeutic Applications[2]

Isoform Selectivity Profile

4-PBSA is a pan-inhibitor with varying degrees of affinity for human CA isoforms. Its activity is typically measured via the Stopped-Flow CO_2 Hydrase Assay.[2]

© 2026 BenchChem. All rights reserved.

Isoform	Location	Pathological Relevance	Inhibition Constant ( ) Range*
hCA I	Cytosolic (RBCs)	General physiology	50 – 200 nM
hCA II	Cytosolic (Eye, Kidney)	Glaucoma, Edema	2 – 10 nM (High Potency)
hCA IX	Transmembrane	Hypoxic Tumors	20 – 50 nM
hCA XII	Transmembrane	Glaucoma, Cancer	5 – 30 nM

*Note: Values are approximate ranges derived from structure-activity relationship (SAR) studies of 4-alkoxybenzenesulfonamides. The propoxy derivative typically exhibits single-digit nanomolar affinity for hCA II.

Glaucoma Research

The 4-propoxy group renders the molecule sufficiently lipophilic to penetrate the cornea, a major hurdle for topical antiglaucoma drugs. Unlike acetazolamide (which requires oral dosing or high-dose topical application due to poor permeability), 4-PBSA derivatives serve as lead compounds for developing topical CAIs that lower intraocular pressure (IOP) by reducing aqueous humor secretion.

Structure-Activity Relationship (SAR) Analysis

The length of the alkoxy tail is the primary determinant of potency and selectivity.

- Tail Length vs. Potency:
  - Methoxy (C1): Weak interaction with the hydrophobic pocket.
  - Propoxy (C3):Optimal length for hCA II. It fills the pocket without steric clashing.
  - Pentyloxy (C5+): May introduce steric hindrance or folding issues, though often retains high potency against hCA IX.

© 2026 BenchChem. All rights reserved.

- Electronic Effects: The alkoxy group is an electron-donating group (EDG). This slightly decreases the acidity of the sulfonamide NH_2, potentially raising the pKa compared to electron-withdrawing substituents (like $-NO_2$). However, the lipophilic gain outweighs the minor electronic penalty.

Visualization: SAR Logic

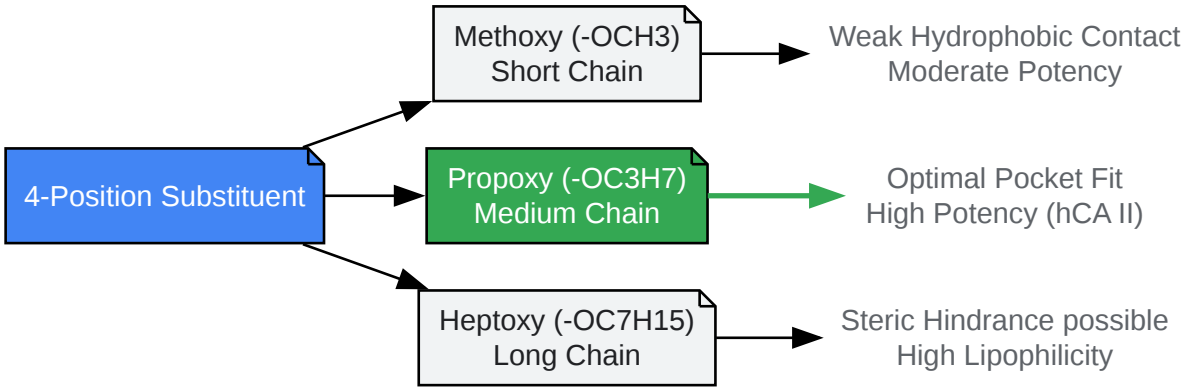

Click to download full resolution via product page

Caption: Influence of alkoxy chain length on CA inhibitory potency.

Experimental Protocol: Stopped-Flow CO_2 Hydrase Assay

This is the gold-standard method for determining the

of 4-PBSA. It measures the rate of the physiological reaction:

.

Reagents[2][4][7][8]

- Buffer: 20 mM HEPES (pH 7.5), 20 mM Na_2SO_4 (to maintain ionic strength).
- Indicator: 0.2 mM Phenol Red (absorbance max at 557 nm).
- Substrate: Saturated CO_2 solution (bubbled for 30 min at 25°C).
- Enzyme: Recombinant hCA II (approx. 10–20 nM final concentration).

© 2026 BenchChem. All rights reserved.

- Inhibitor: 4-PBSA (dissolved in DMSO, diluted to 0.1 nM – 1 µM).

Workflow

- Incubation: Incubate hCA II with varying concentrations of 4-PBSA for 15 minutes at room temperature to allow formation of the E-I complex.
- Mixing: Rapidly mix the Enzyme-Inhibitor solution with the CO_2-Indicator solution in a Stopped-Flow apparatus (e.g., Applied Photophysics).
- Measurement: Monitor the decrease in absorbance at 557 nm (acidification of the medium as CO_2 is hydrated to $H^+ + HCO_3^-$).
- Calculation:
  - Determine the uncatalyzed rate (
).
  - Determine the catalyzed rate (
) without inhibitor.
  - Calculate % inhibition at each [I].
  - Fit data to the Cheng-Prusoff equation to derive
    and
    .

Visualization: Assay Workflow

© 2026 BenchChem. All rights reserved.

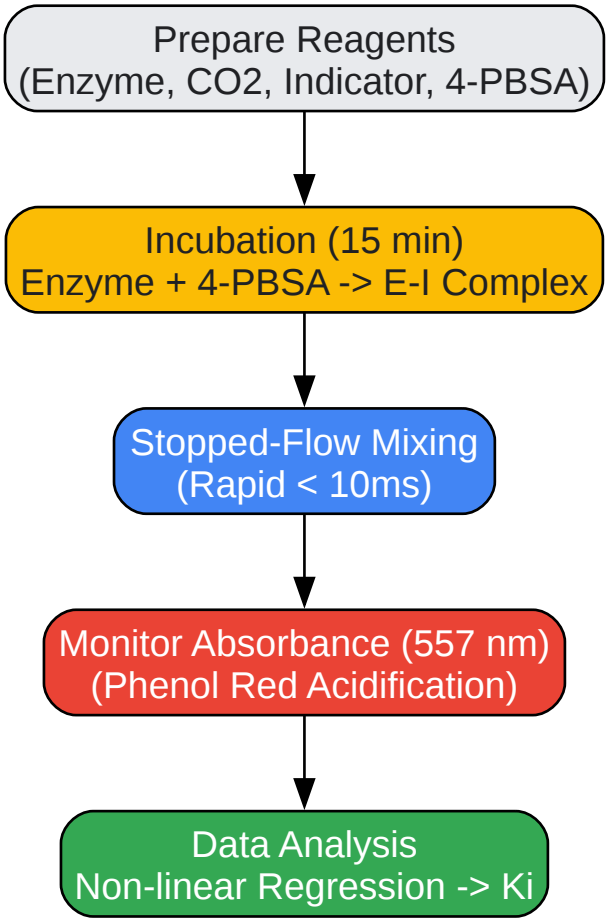

Click to download full resolution via product page

Caption: Step-by-step workflow for the Stopped-Flow CO_2 Hydrase Assay.

Safety & Handling

- Hazard Classification: Irritant (Skin/Eye). Sulfonamides can cause allergic reactions in sensitized individuals.
- Storage: Store solid at -20°C. Solutions in DMSO are stable at -20°C for up to 1 month.
- Deep Freeze Warning: Avoid repeated freeze-thaw cycles of the enzyme stock, as this degrades hCA activity, leading to artificially low

  values (false potency).

References

© 2026 BenchChem. All rights reserved.

- Supuran, C. T. (2008). Carbonic anhydrases: novel therapeutic applications for inhibitors and activators. Nature Reviews Drug Discovery. Link
- Alterio, V., et al. (2012). Crystal structure of the carbonic anhydrase II–inhibitor complex reveals the structural basis for the "tail approach". Proceedings of the National Academy of Sciences (PNAS). Link
- Khalifah, R. G. (1971). The carbon dioxide hydration activity of carbonic anhydrase.[3][2][4][5] I. Stop-flow kinetic studies on the native human isoenzymes B and C. Journal of Biological Chemistry. Link
- Scozzafava, A., & Supuran, C. T. (2002). Carbonic anhydrase inhibitors: synthesis of water-soluble, topically effective, intraocular pressure-lowering aromatic/heterocyclic sulfonamides containing cationic or anionic moieties. Journal of Medicinal Chemistry. Link
- Mincione, F., et al. (1999). Carbonic anhydrase inhibitors: inhibition of isozymes I, II and IV with N-hydroxysulfonamides—a novel class of potent inhibitors. Bioorganic & Medicinal Chemistry Letters. Link

Need Custom Synthesis?

BenchChem offers custom synthesis for rare earth carbides and specific isotopiclabeling.

Email: info@benchchem.com or Request Quote Online.

Sources

- 1. 4-Propoxybenzenesulfonamide | C9H13NO3S | CID 21978067 - PubChem [pubchem.ncbi.nlm.nih.gov]
- 2. Inhibition Studies on Human and Mycobacterial Carbonic Anhydrases with N-((4-Sulfamoylphenyl)carbamothioyl) Amides - PMC [pmc.ncbi.nlm.nih.gov]
- 3. sigmaaldrich.com [sigmaaldrich.com]
- 4. The inhibition of bovine carbonic anhydrase by saccharin and 2- and 4-carbobenzoxybenzene sulfonamide - PubMed [pubmed.ncbi.nlm.nih.gov]
- 5. 4-Anilinoquinazoline-based benzenesulfonamides as nanomolar inhibitors of carbonic anhydrase isoforms I, II, IX, and XII: design, synthesis, in-vitro, and in-silico biological

studies - PMC [pmc.ncbi.nlm.nih.gov]

- To cite this document: BenchChem. [Biological Activity Profile: 4-Propoxybenzenesulfonamide]. BenchChem, [2026]. [Online PDF]. Available at: [https://www.benchchem.com/product/b174123/docs#biological-activity-profile-4-propoxybenzenesulfonamide]

Disclaimer & Data Validity:

The information provided in this document is for Research Use Only (RUO) and is strictly not intended for diagnostic or therapeutic procedures. While BenchChem strives to provide accurate protocols, we make no warranties, express or implied, regarding the fitness of this product for every specific experimental setup.

Technical Support: The protocols provided are for reference purposes. Unsure if this reagent suits your experiment?

Need Industrial/Bulk Grade? Request Custom Synthesis Quote

BenchChem

Our mission is to be the trusted global source of essential and advanced chemicals, empowering scientists and researchers to drive progress in science and industry.

Contact

Address: 3281 E Guasti Rd

Ontario, CA 91761, United States

Phone: (601) 213-4426

Email: info@benchchem.com

Contact our Ph.D. Support Team for a compatibility check