The Electronic Architecture of the Quinoxaline Ring System: An In-depth Technical Guide

Author: BenchChem Technical Support Team. **Date**: May 2026

Compound of Interest

Compound Name:	*5-(Bromomethyl)quinoxaline*
CAS No.:	*131454-80-3*
Cat. No.:	*B173756*

Get Quote

For Researchers, Scientists, and Drug Development Professionals

The quinoxaline ring system, a bicyclic heteroaromatic compound formed by the fusion of a benzene and a pyrazine ring, stands as a cornerstone in modern medicinal chemistry and materials science.[1][2] Its unique electronic properties, characterized by an electron-deficient pyrazine ring, govern its reactivity, photophysical behavior, and diverse biological activities.[3] This technical guide provides a comprehensive exploration of the electronic landscape of the quinoxaline core, offering insights into its fundamental properties, experimental characterization, and its role in modulating key signaling pathways.

Core Electronic Properties

The electronic nature of the quinoxaline scaffold is fundamentally dictated by the presence of two nitrogen atoms within the pyrazine ring. This imbues the ring system with a distinct electron-deficient character, making it susceptible to nucleophilic attack and influencing the electronic characteristics of its derivatives.[3] The aromaticity of the system is a result of the delocalization of ten π-electrons across the fused rings.

© 2026 BenchChem. All rights reserved.

Computational studies, primarily using Density Functional Theory (DFT), have been instrumental in elucidating the electronic structure of quinoxaline and its derivatives.[4][5][6] These studies consistently show that the Highest Occupied Molecular Orbital (HOMO) is typically distributed over the entire molecule, while the Lowest Unoccupied Molecular Orbital (LUMO) is predominantly localized on the electron-deficient quinoxaline core.[7][8] This separation of frontier molecular orbitals is key to understanding the charge transfer characteristics and reactivity of these compounds.

Quantitative Electronic Data

The electronic properties of quinoxaline derivatives can be finely tuned through substitution, allowing for the rational design of molecules with specific functions. The following tables summarize key quantitative data from experimental and computational studies.

Table 1: Frontier Molecular Orbital Energies of Selected Quinoxaline Derivatives

Compound	Method	HOMO (eV)	LUMO (eV)	Energy Gap (eV)	Reference
Quinoxaline	DFT/B3LYP/6-311++G(d,p)	-6.65	-1.13	5.52	[9]
2,3-Diphenylquinoxaline	DFT/B3LYP/6-31G(d,p)	-5.93	-1.98	3.95	[7]
PBCl-MTQF	CV	-5.06	-3.27	1.79	[8]
PBCl-MTQCN	CV	-5.14	-3.38	1.76	[8]
6-methyl-6H-indolo[2,3-b]quinoxaline	DFT (TPSSh-D4)	-	-	-	[10]
Quinoxaline-2-carboxylic acid	DFT	-	-	-	[11]

© 2026 BenchChem. All rights reserved.

Table 2: Redox Potentials of Selected Quinoxaline Derivatives

Compound	Method	Reduction Potential (V vs. ref)	Oxidation Potential (V vs. ref)	Reference
Quinoxaline	Cyclic Voltammetry	-2.04 vs Fc/Fc+	-	[10]
6-methyl-6H-indolo[2,3-b]quinoxaline	Cyclic Voltammetry	-1.98 vs Fc/Fc+	-	[10]
Quinoxaline Derivatives (Qx-1 to Qx-5)	Cyclic Voltammetry	Reversible reduction observed	-	[12]
Quinoxaline Derivatives (6, 16-20)	Cyclic Voltammetry	Recorded in 0.1 M KOH/0.9 M KCl	-	[13]

Table 3: Photophysical Properties of Selected Quinoxaline Derivatives

© 2026 BenchChem. All rights reserved.

Compound	Solvent	Absorption Max (λ_abs, nm)	Emission Max (λ_em, nm)	Reference
Quinoxaline-based compound 1	THF	364	425	[7]
Quinoxaline-based compound 2	THF	371	425	[7]
Quinoxaline-based compound 3	THF	369	425	[7]
Quinoxaline-based compound 4	THF	367	425	[7]
10-ethyl-7-oxo-7,10-dihydropyrido[2,3-f]quinoxaline 1a	DMSO	294, 342, 380	-	[14]
Pyrrolo[1,2-a]quinoxaline (QHH)	Toluene	340	398	[15]
2,4-diphenylpyrrolo[1,2-a]quinoxaline (QPP)	Toluene	350-362	442	[15]
2,3-diphenylquinoxaline amine derivatives	Various	Blue to yellow emission	-	[16]
Quinoxaline-2(1H)-one	Various	-	Solvent-dependent	[17]

© 2026 BenchChem. All rights reserved.

Experimental Protocols

The characterization of the electronic properties of quinoxaline derivatives relies on a suite of spectroscopic and electrochemical techniques. Below are detailed methodologies for key experiments.

Synthesis of Quinoxaline Derivatives

A common and versatile method for synthesizing the quinoxaline ring is the condensation of an ortho-phenylenediamine with a 1,2-dicarbonyl compound.[18][19]

General Procedure:

- Dissolve the o-phenylenediamine (1 mmol) and the 1,2-dicarbonyl compound (1 mmol) in a suitable solvent such as ethanol or acetic acid.[19][20]
- Add a catalytic amount of acid (e.g., HCl) if required.[19]
- The reaction mixture is then typically refluxed or subjected to microwave irradiation for a specified time, with reaction progress monitored by Thin Layer Chromatography (TLC).[19]
- Upon completion, the product is isolated by filtration or extraction, and purified by recrystallization or column chromatography.[20]

UV-Visible and Fluorescence Spectroscopy

These techniques are fundamental for probing the electronic transitions within the quinoxaline system.

Instrumentation: A standard UV-Vis spectrophotometer and a fluorescence spectrometer are used.

Sample Preparation:

- Prepare a stock solution of the quinoxaline derivative in a spectroscopic grade solvent (e.g., chloroform, THF, DMSO) at a concentration of approximately 10^{-3} M.[21]

© 2026 BenchChem. All rights reserved.

- For measurements, dilute the stock solution to a final concentration of around 10^{-5} to 10^{-6} M.[7][21]

Measurement:

- Record the UV-Vis absorption spectrum over a relevant wavelength range (typically 200-800 nm).
- For fluorescence measurements, excite the sample at its absorption maximum and record the emission spectrum. The excitation and emission slits are typically set to a bandwidth of 5-10 nm.

Cyclic Voltammetry (CV)

Cyclic voltammetry is employed to determine the redox potentials and to assess the electrochemical stability of quinoxaline derivatives.[12]

Instrumentation: A potentiostat with a three-electrode setup is used. This consists of a working electrode (e.g., glassy carbon), a reference electrode (e.g., Ag/AgCl or SCE), and a counter electrode (e.g., platinum wire).[12][13]

Procedure:

- Prepare a solution of the quinoxaline derivative (typically 1-5 mM) in a suitable solvent containing a supporting electrolyte (e.g., 0.1 M tetrabutylammonium hexafluorophosphate ($TBAPF_6$) in dichloromethane or acetonitrile).[12][22]
- De-aerate the solution by bubbling with an inert gas (e.g., nitrogen or argon) for at least 15 minutes prior to the measurement.
- Scan the potential between set limits at a specific scan rate (e.g., 100 mV/s) and record the resulting current.[13][22]
- The HOMO and LUMO energy levels can be estimated from the onset oxidation and reduction potentials, respectively.[8]

Role in Signaling Pathways and Drug Development

© 2026 BenchChem. All rights reserved.

The unique electronic properties of the quinoxaline scaffold make it a privileged structure in drug discovery, particularly in the development of kinase inhibitors for cancer therapy.[23] Quinoxaline derivatives have been shown to target and inhibit various protein kinases involved in aberrant cell signaling pathways that drive tumor growth and proliferation.[18][24]

Kinase Inhibition Signaling Pathway

Many quinoxaline-based anticancer agents function by inhibiting receptor tyrosine kinases (RTKs) such as c-Met, EGFR, and VEGFR-2, or downstream kinases in pathways like the MAPK/ERK and PI3K/Akt/mTOR pathways.[24][25] Inhibition of these kinases can lead to cell cycle arrest and apoptosis.[18][25]

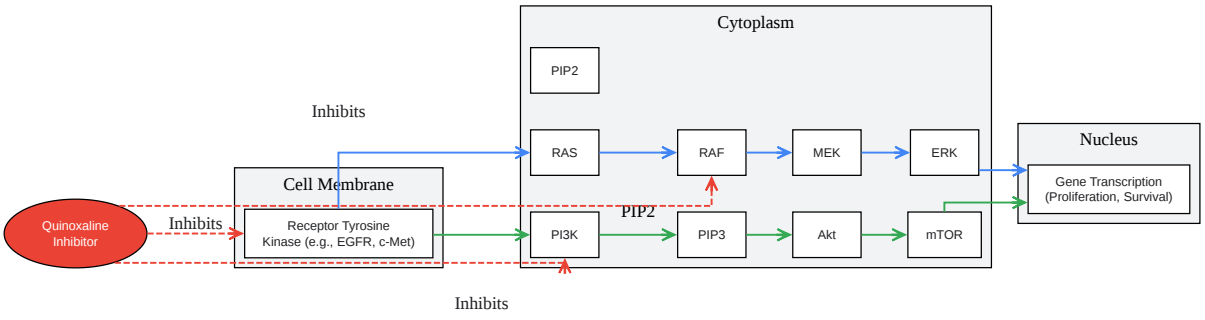

Click to download full resolution via product page

Caption: General signaling pathway targeted by quinoxaline-based kinase inhibitors.

Experimental Workflow for Screening Anticancer Activity

The evaluation of novel quinoxaline derivatives as potential anticancer agents typically follows a standardized workflow.

© 2026 BenchChem. All rights reserved.

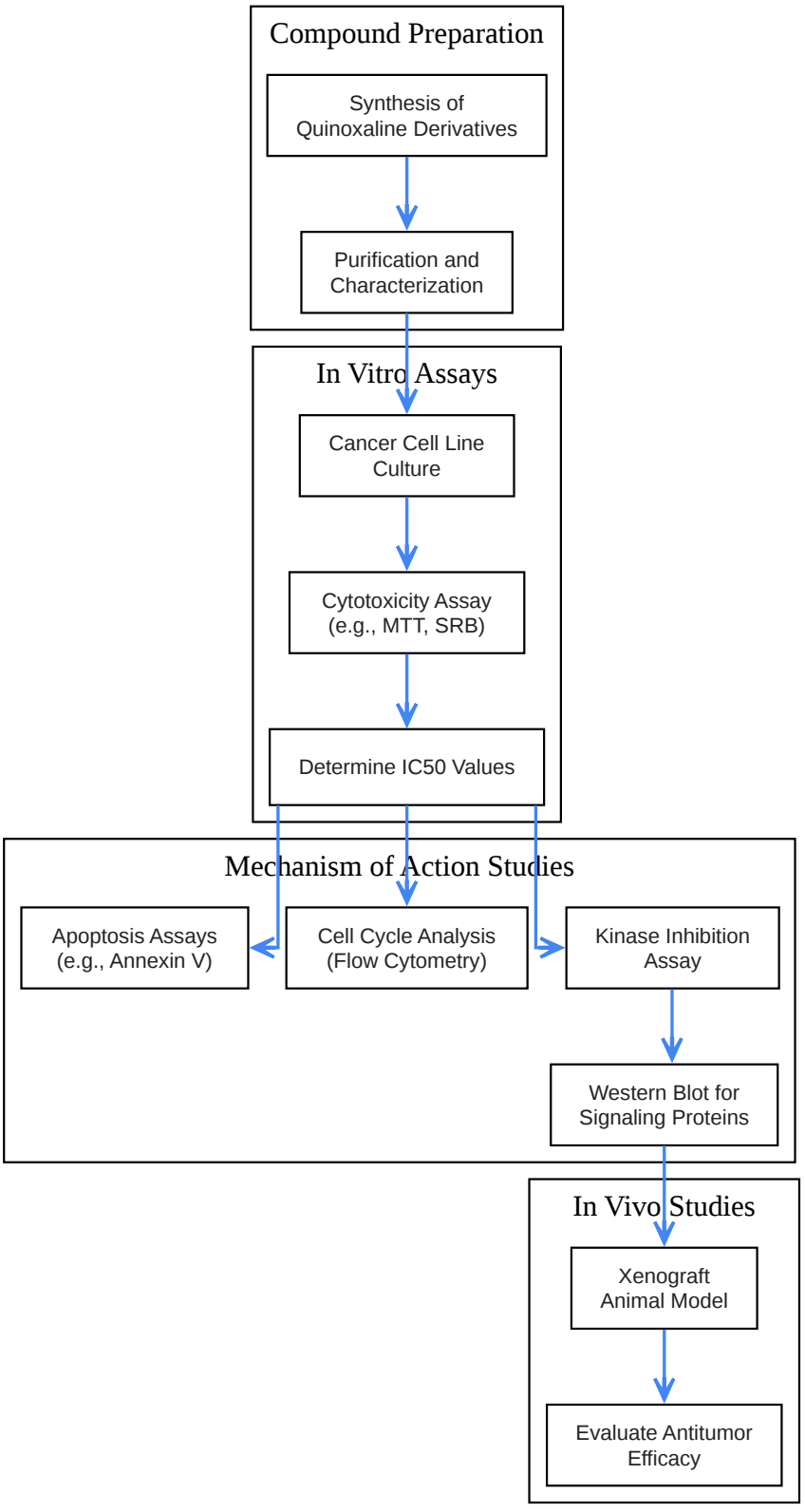

Click to download full resolution via product page

Caption: A typical workflow for the biological screening of quinoxaline derivatives.

© 2026 BenchChem. All rights reserved.

Conclusion

The quinoxaline ring system possesses a rich and tunable electronic architecture that has been extensively leveraged in the development of functional materials and therapeutic agents. A thorough understanding of its electronic properties, facilitated by both experimental and computational methodologies, is paramount for the rational design of novel quinoxaline derivatives with enhanced performance. As research in this field continues to evolve, the principles outlined in this guide will serve as a valuable resource for scientists and researchers aiming to harness the full potential of this versatile heterocyclic scaffold.

Need Custom Synthesis?

BenchChem offers custom synthesis for rare earth carbides and specific isotopiclabeling.

Email: info@benchchem.com or Request Quote Online.

References

- 1. researchgate.net [researchgate.net]
- 2. Recent advances on quinoxalines as target-oriented chemotherapeutic anticancer agents through apoptosis | Semantic Scholar [semanticscholar.org]
- 3. iris.cnr.it [iris.cnr.it]
- 4. researchgate.net [researchgate.net]
- 5. researchgate.net [researchgate.net]
- 6. researchgate.net [researchgate.net]
- 7. utoronto.scholaris.ca [utoronto.scholaris.ca]
- 8. Effect of electron-withdrawing fluorine and cyano substituents on photovoltaic properties of two-dimensional quinoxaline-based polymers - PMC [pmc.ncbi.nlm.nih.gov]
- 9. sphinxsai.com [sphinxsai.com]
- 10. pubs.acs.org [pubs.acs.org]
- 11. par.nsf.gov [par.nsf.gov]
- 12. Eco-friendly preparation and testing of electroactive quinoxalines - Arabian Journal of Chemistry [arabjchem.org]

© 2026 BenchChem. All rights reserved.

- 13. researchgate.net [researchgate.net]
- 14. researchgate.net [researchgate.net]
- 15. Pyrrolo[1,2-a]quinoxaline: A Combined Experimental and Computational Study on the Photophysical Properties of a New Photofunctional Building Block - PMC [pmc.ncbi.nlm.nih.gov]
- 16. The design and synthesis of 2,3-diphenylquinoxaline amine derivatives as yellow-blue emissive materials for optoelectrochemical study - New Journal of Chemistry (RSC Publishing) [pubs.rsc.org]
- 17. researchgate.net [researchgate.net]
- 18. researchgate.net [researchgate.net]
- 19. ijrar.org [ijrar.org]
- 20. journals.asmarya.edu.ly [journals.asmarya.edu.ly]
- 21. researchgate.net [researchgate.net]
- 22. researchgate.net [researchgate.net]
- 23. bioengineer.org [bioengineer.org]
- 24. Understanding the mechanism of action of pyrrolo[3,2-b]quinoxaline-derivatives as kinase inhibitors - PMC [pmc.ncbi.nlm.nih.gov]
- 25. benchchem.com [benchchem.com]

- To cite this document: BenchChem. [The Electronic Architecture of the Quinoxaline Ring System: An In-depth Technical Guide]. BenchChem, [2026]. [Online PDF]. Available at: [https://www.benchchem.com/product/b173756/docs#the-electronic-architecture-of-the-quinoxaline-ring-system-an-in-depth-technical-guide]

Disclaimer & Data Validity:

The information provided in this document is for Research Use Only (RUO) and is strictly not intended for diagnostic or therapeutic procedures. While BenchChem strives to provide accurate protocols, we make no warranties, express or implied, regarding the fitness of this product for every specific experimental setup.

Technical Support: The protocols provided are for reference purposes. Unsure if this reagent suits your experiment?

© 2026 BenchChem. All rights reserved.

Need Industrial/Bulk Grade? Request Custom Synthesis Quote

BenchChem

Our mission is to be the trusted global source of essential and advanced chemicals, empowering scientists and researchers to drive progress in science and industry.

Contact

Address: 3281 E Guasti Rd

Ontario, CA 91761, United States

Phone: (601) 213-4426

Email: info@benchchem.com

Contact our Ph.D. Support Team for a compatibility check

© 2026 BenchChem. All rights reserved.