The Multifaceted Biological Activities of Chloro-Substituted Indole Esters: A Technical Guide

Author: BenchChem Technical Support Team. **Date**: January 2026

Compound of Interest		
Compound Name:	*Methyl 6-chloro-1H-indole-5-carboxylate*	
Cat. No.:	*B171617*	*Get Quote*

For Researchers, Scientists, and Drug Development Professionals

The indole nucleus, a privileged scaffold in medicinal chemistry, continues to be a focal point for the development of novel therapeutic agents. The introduction of a chlorine atom and an ester functional group onto this bicyclic heterocycle gives rise to a class of compounds known as chloro-substituted indole esters, which exhibit a remarkable breadth of biological activities. This technical guide provides an in-depth exploration of the known biological activities of these compounds, with a focus on their anticancer, antimicrobial, antiviral, and anti-inflammatory properties. This document is intended to serve as a comprehensive resource, detailing quantitative bioactivity data, experimental methodologies, and the underlying mechanisms of action to facilitate further research and drug development endeavors.

Anticancer Activity

Chloro-substituted indole esters have emerged as a promising class of anticancer agents, demonstrating potent activity against a variety of cancer cell lines. Their mechanisms of action often involve the inhibition of key signaling pathways crucial for cancer cell proliferation and survival, such as the Epidermal Growth Factor Receptor (EGFR) and BRAF kinase pathways. [1][2]

Quantitative Anticancer Activity Data

© 2025 BenchChem. All rights reserved.

The in vitro cytotoxic and inhibitory activities of several 5-chloro-indole-2-carboxylate derivatives have been evaluated against various cancer cell lines and kinases. The data, including 50% growth inhibition (GI_{50}) and 50% inhibitory concentration (IC_{50}) values, are summarized in Table 1.

Table 1: Anticancer Activity of 5-Chloro-indole-2-carboxylate Derivatives[1][3][4]

Compound ID	R Group	Mean GI_{50} (nM)[1]	IC_{50} vs. EGFR (nM)	IC_{50} vs. BRAFV600E (nM)
3a	H	35	75	45
3b	p-pyrrolidin-1-yl	31	71	38
3e	m-piperidin-1-yl	29	68	35
Erlotinib	(Reference)	33	80	60
Vemurafenib	(Reference)	-	-	15

[1]Mean GI_{50} against a panel of four human cancer cell lines.

Signaling Pathway Inhibition: EGFR and BRAF

The anticancer effects of many chloro-substituted indole esters are attributed to their ability to inhibit protein kinases involved in oncogenic signaling. The EGFR signaling cascade is a critical pathway that, when dysregulated, can lead to uncontrolled cell growth.[5] Similarly, the BRAF kinase is a key component of the MAPK/ERK pathway, and its V600E mutation is a common driver in several cancers.

Below is a diagram illustrating the EGFR and BRAF signaling pathways and the points of inhibition by these indole derivatives.

© 2025 BenchChem. All rights reserved.

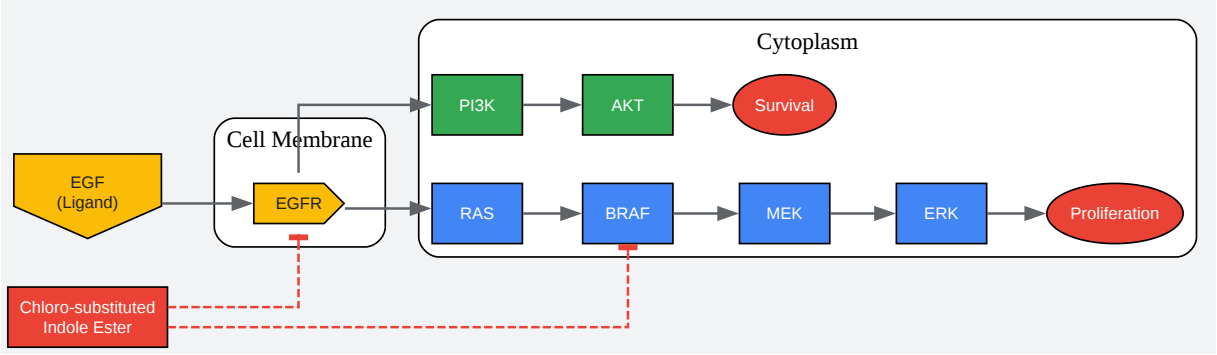

Click to download full resolution via product page

Simplified EGFR and BRAF signaling pathways with points of inhibition.

Experimental Protocol: MTT Assay for Cell Viability

The MTT (3-(4,5-dimethylthiazol-2-yl)-2,5-diphenyltetrazolium bromide) assay is a colorimetric method used to assess cell viability.[6][7][8][9]

Workflow:

© 2025 BenchChem. All rights reserved.

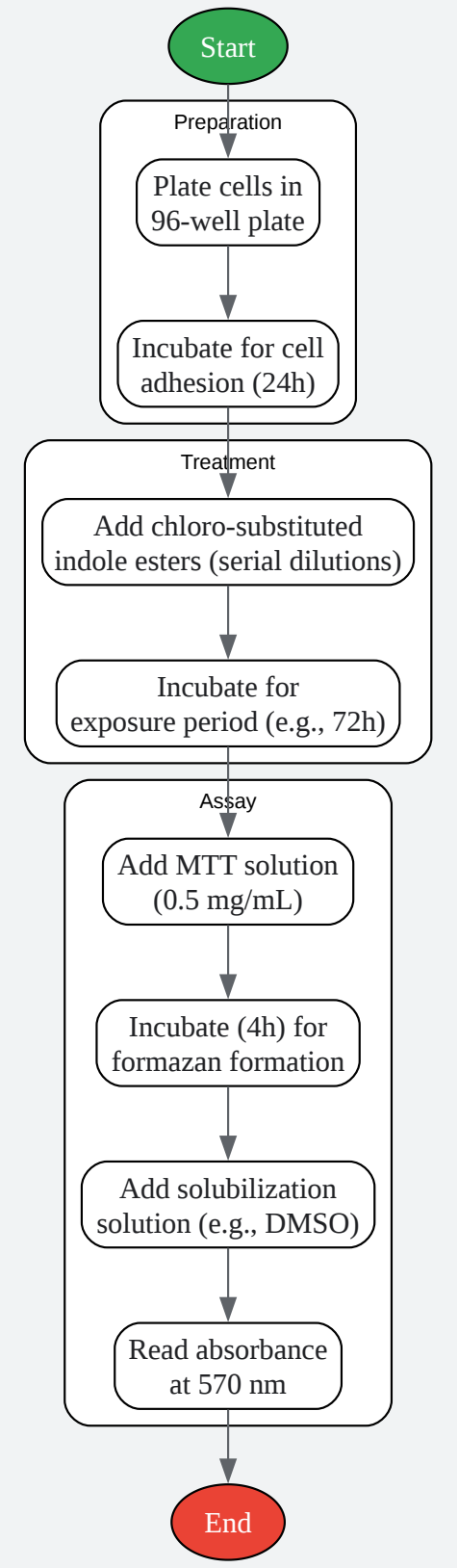

Click to download full resolution via product page

Workflow for the MTT cell viability assay.

© 2025 BenchChem. All rights reserved.

Detailed Methodology:

- Cell Seeding: Cells are seeded into 96-well plates at an appropriate density and allowed to adhere overnight in a humidified incubator at 37°C with 5% CO_2.
- Compound Treatment: The following day, the culture medium is replaced with fresh medium containing various concentrations of the chloro-substituted indole esters. A vehicle control (e.g., DMSO) is also included.
- Incubation: The plates are incubated for a specified period, typically 48 to 72 hours.
- MTT Addition: After the incubation period, MTT solution is added to each well to a final concentration of 0.5 mg/mL, and the plates are incubated for an additional 4 hours.
- Formazan Solubilization: The medium is then removed, and a solubilizing agent, such as dimethyl sulfoxide (DMSO), is added to each well to dissolve the purple formazan crystals.
- Absorbance Measurement: The absorbance is measured using a microplate reader at a wavelength of 570 nm.
- Data Analysis: Cell viability is calculated as a percentage of the vehicle-treated control cells. The IC_{50} value is determined by plotting the percentage of cell viability against the logarithm of the compound concentration.

Antimicrobial Activity

Certain chloro-substituted indole esters have demonstrated notable activity against a range of bacterial and fungal pathogens. The presence of the chlorine atom on the indole ring often enhances the antimicrobial potency of these molecules.

Quantitative Antimicrobial Data

The antimicrobial efficacy of these compounds is typically quantified by their Minimum Inhibitory Concentration (MIC), which is the lowest concentration of the compound that prevents visible growth of a microorganism.

Table 2: Antibacterial Activity of Chloro-Substituted Indole Derivatives[10][11]

© 2025 BenchChem. All rights reserved.

Compound/Derivative	Bacterium	MIC (µg/mL)
Indole-thiadiazole derivative (m-chlorophenyl)	Staphylococcus aureus	6.25
Indole-triazole derivative (m-chlorophenyl)	Staphylococcus aureus	6.25
Indole-thiadiazole derivative (m-chlorophenyl)	MRSA	>6.25
Indole-triazole derivative (m-chlorophenyl)	MRSA	6.25
Ciprofloxacin (Reference)	MRSA	6.25
5-Chloro indole derivative	Staphylococcus aureus	16
6-Chloro indole derivative	Staphylococcus aureus	8

Experimental Protocol: Minimum Inhibitory Concentration (MIC) Test

The MIC of a compound is determined using a broth microdilution method.[12][13][14][15]

Workflow:

© 2025 BenchChem. All rights reserved.

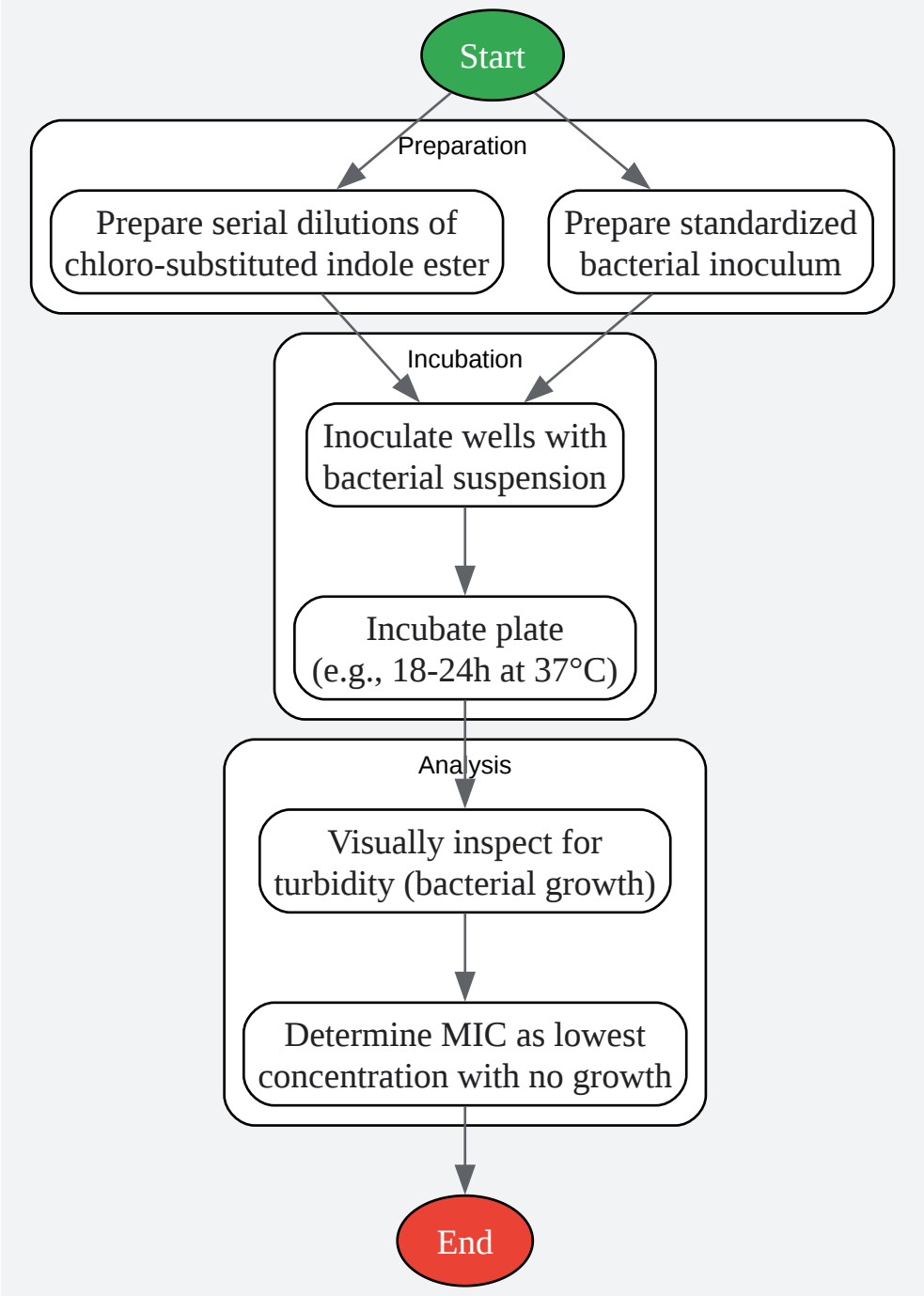

Click to download full resolution via product page

Workflow for the Minimum Inhibitory Concentration (MIC) assay.

Detailed Methodology:

- Compound Dilution: A two-fold serial dilution of the test compound is prepared in a 96-well microtiter plate containing a suitable broth medium (e.g., Mueller-Hinton broth).

© 2025 BenchChem. All rights reserved.

- Inoculum Preparation: A standardized bacterial suspension (e.g., 0.5 McFarland standard) is prepared from a fresh culture.
- Inoculation: Each well of the microtiter plate is inoculated with the bacterial suspension.
- Incubation: The plate is incubated at 37°C for 18-24 hours.
- MIC Determination: The MIC is recorded as the lowest concentration of the compound at which no visible bacterial growth (turbidity) is observed.

Antiviral Activity

The antiviral potential of chloro-substituted indole esters has been investigated against several viruses, including the Severe Acute Respiratory Syndrome Coronavirus 2 (SARS-CoV-2). These compounds can act as inhibitors of viral enzymes that are essential for replication.

Quantitative Antiviral Data

The antiviral activity is often expressed as the 50% effective concentration (EC_{50}) or the 50% inhibitory concentration (IC_{50}) against a specific viral target.

Table 3: Antiviral Activity of Indole Chloropyridinyl Esters against SARS-CoV-2[16][17]

Compound	SARS-CoV-2 3CLpro IC_{50} (nM)	Antiviral EC_{50} in VeroE6 cells (μM)
1	250	2.8
7d (N-allyl derivative)	73	Not Reported
Remdesivir (Reference)	-	1.2

Mechanism of Action: Inhibition of SARS-CoV-2 3CLpro

The main protease (3CLpro) of SARS-CoV-2 is a cysteine protease that plays a critical role in the viral replication cycle by cleaving the viral polyproteins.[18][19][20] Indole chloropyridinyl esters have been shown to act as covalent inhibitors of this enzyme. The catalytic dyad of 3CLpro, consisting of Cysteine-145 and Histidine-41, is involved in the nucleophilic attack on

© 2025 BenchChem. All rights reserved.

the ester carbonyl of the inhibitor. This leads to the formation of a covalent thioester bond with the active site cysteine, thereby inactivating the enzyme.[16]

© 2025 BenchChem. All rights reserved.

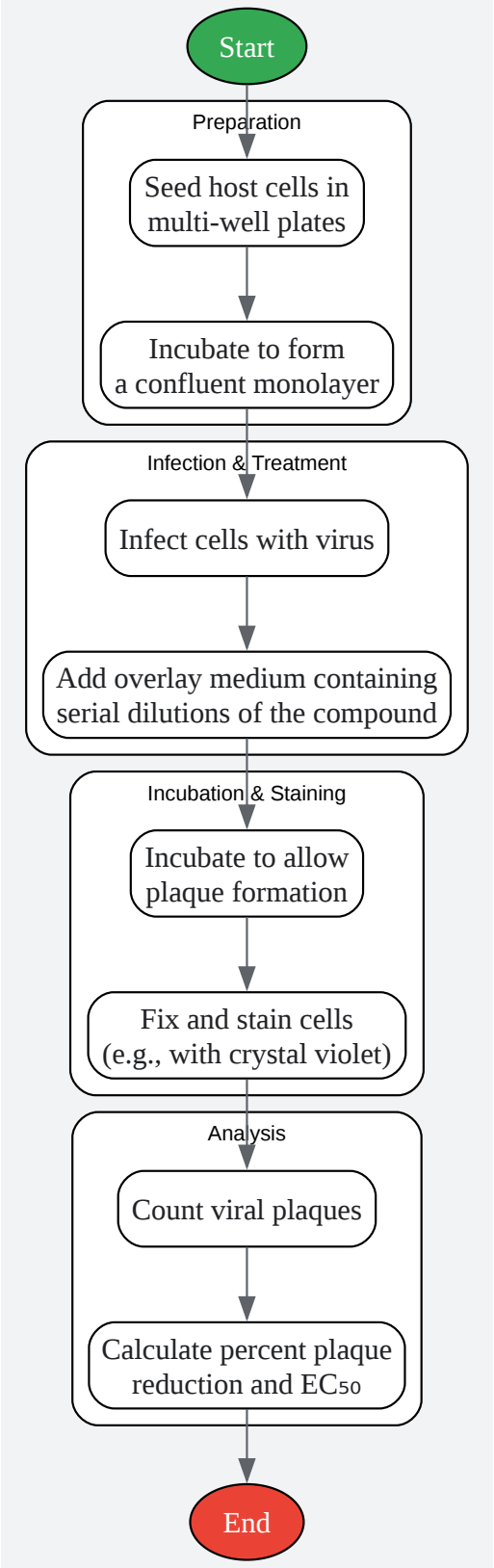

© 2025 BenchChem. All rights reserved.

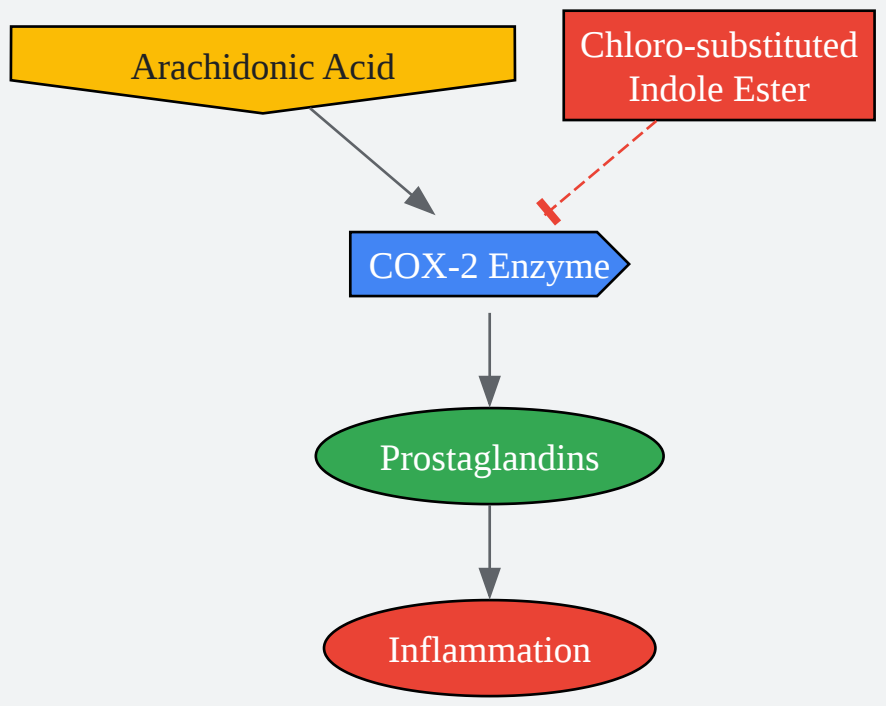

Click to download full resolution via product page

Need Custom Synthesis?

BenchChem offers custom synthesis for rare earth carbides and specific isotopiclabeling.

Email: info@benchchem.com or Request Quote Online.

References

- 1. Identification of Indole Derivatives as Self-Growth Inhibitors of Symbiobacterium thermophilum, a Unique Bacterium Whose Growth Depends on Coculture with a Bacillus sp - PMC [pmc.ncbi.nlm.nih.gov]
- 2. scirp.org [scirp.org]
- 3. medium.com [medium.com]
- 4. mdpi.com [mdpi.com]
- 5. researchgate.net [researchgate.net]
- 6. Measurement of cyclooxygenase inhibition using liquid chromatography-tandem mass spectrometry - PMC [pmc.ncbi.nlm.nih.gov]

© 2025 BenchChem. All rights reserved.

- 7. Design, Synthesis, and Evaluation of the COX-2 Inhibitory Activities of New 1,3-Dihydro-2H-indolin-2-one Derivatives - PMC [pmc.ncbi.nlm.nih.gov]
- 8. devtoolsdaily.medium.com [devtoolsdaily.medium.com]
- 9. In Vitro Assays for Cyclooxygenase Activity and Inhibitor Characterization | Springer Nature Experiments [experiments.springernature.com]
- 10. Antimicrobial Activities of New Indole Derivatives Containing 1,2,4-Triazole, 1,3,4-Thiadiazole and Carbothioamide - PMC [pmc.ncbi.nlm.nih.gov]
- 11. mdpi.com [mdpi.com]
- 12. benchchem.com [benchchem.com]
- 13. benchchem.com [benchchem.com]
- 14. assaygenie.com [assaygenie.com]
- 15. Analyzing expression and phosphorylation of the EGF receptor in HNSCC - PMC [pmc.ncbi.nlm.nih.gov]
- 16. bpsbioscience.com [bpsbioscience.com]
- 17. Insight on novel oxindole conjugates adopting different anti-inflammatory investigations and quantitative evaluation - PMC [pmc.ncbi.nlm.nih.gov]
- 18. Synthesis, Characterization of Ethyl 5-(substituted)-1H-pyrazole- 3-carboxylate Derivative as Potent Anti-inflammatory Agents - PubMed [pubmed.ncbi.nlm.nih.gov]
- 19. Design, synthesis, apoptotic, and antiproliferative effects of 5-chloro-3- (2-methoxyvinyl)-indole-2-carboxamides and pyrido[3,4-b]indol-1-ones as potent EGFRWT/EGFRT790M inhibitors - PMC [pmc.ncbi.nlm.nih.gov]
- 20. mdpi.com [mdpi.com]

- To cite this document: BenchChem. [The Multifaceted Biological Activities of Chloro-Substituted Indole Esters: A Technical Guide]. BenchChem, [2026]. [Online PDF]. Available at: [https://www.benchchem.com/product/b171617#known-biological-activity-of-chloro-substituted-indole-esters]

Disclaimer & Data Validity:

The information provided in this document is for Research Use Only (RUO) and is strictly not intended for diagnostic or therapeutic procedures. While BenchChem strives to provide accurate protocols, we make no warranties, express or implied, regarding the fitness of this product for every specific experimental setup.

© 2025 BenchChem. All rights reserved.

Technical Support: The protocols provided are for reference purposes. Unsure if this reagent suits your experiment? [Contact our Ph.D. Support Team for a compatibility check]

Need Industrial/Bulk Grade? Request Custom Synthesis Quote

BenchChem

Our mission is to be the trusted global source of essential and advanced chemicals, empowering scientists and researchers to drive progress in science and industry.

Contact

Address: 3281 E Guasti Rd

Ontario, CA 91761, United States

Phone: (601) 213-4426

Email: info@benchchem.com

© 2025 BenchChem. All rights reserved.