Optimal Concentration of PD180970 for In Vitro Assays: Application Notes and Protocols

Author: BenchChem Technical Support Team. **Date**: April 2026

Compound of Interest

Compound Name:	*PD180970*
CAS No.:	*287204-45-9*
Cat. No.:	*B1684433*

Get Quote

For Researchers, Scientists, and Drug Development Professionals

Introduction

PD180970 is a potent, ATP-competitive inhibitor of Bcr-Abl and Src family kinases.[1][2] It has demonstrated significant activity in preclinical studies, particularly in the context of chronic myelogenous leukemia (CML).[2][3] This document provides detailed application notes and protocols for determining and utilizing the optimal in vitro working concentration of **PD180970** in various cell-based and enzymatic assays. The provided protocols and data will aid researchers in designing experiments to effectively study the mechanism of action and therapeutic potential of this compound.

Data Presentation

The inhibitory activity of **PD180970** is summarized in the tables below, providing a clear reference for its potency against key oncogenic kinases.

Table 1: In Vitro Enzymatic Inhibition by **PD180970**

© 2026 BenchChem. All rights reserved.

Target Kinase	Assay Type	IC_{50} (nM)	Reference
Bcr-Abl (p210)	Autophosphorylation	5	[1][4]
Purified recombinant Abl	Kinase Activity	2.2	[1][4]
Src	Autophosphorylation	0.8	[1][4]
c-Kit	Autophosphorylation	50	[1][4]

Table 2: Cellular Activity of **PD180970** in K562 Cells

Cellular Event	Assay Type	IC_{50} (nM)	Reference
Tyrosine Phosphorylation of p210 Bcr-Abl	Western Blot	170	[1][4]
Tyrosine Phosphorylation of Gab2	Western Blot	80	[1][4]
Tyrosine Phosphorylation of CrkL	Western Blot	80	[1][4]
Inhibition of Stat5 DNA-binding activity	EMSA	5	[4][5]
Induction of Apoptosis	Annexin V Assay	500 (concentration used)	[1][4]

Signaling Pathways

PD180970 exerts its effects by inhibiting key signaling pathways involved in cell proliferation, survival, and transformation. The following diagrams illustrate the primary pathways targeted by **PD180970**.

© 2026 BenchChem. All rights reserved.

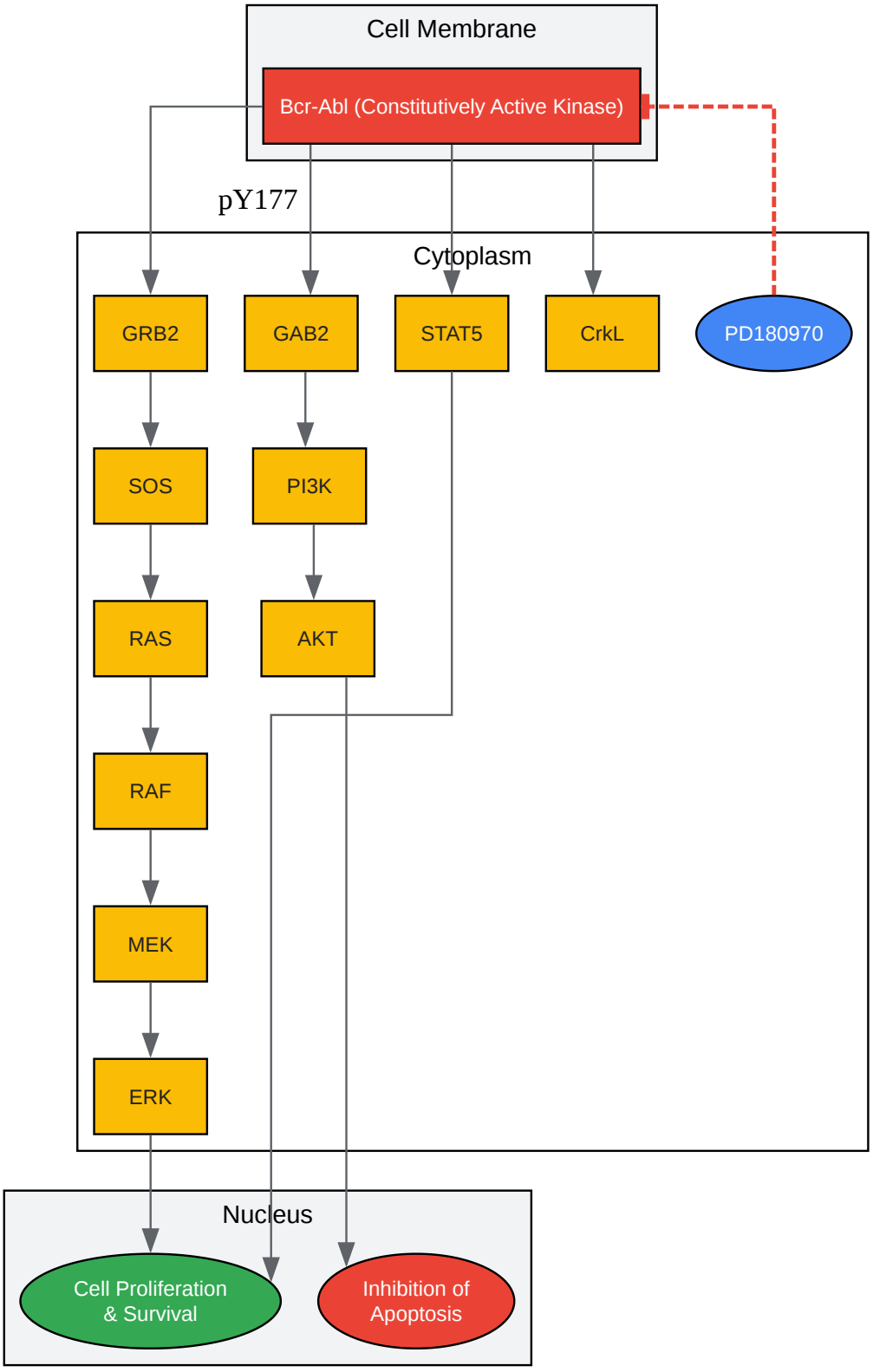

Click to download full resolution via product page

Bcr-Abl Signaling Pathway and Inhibition by **PD180970**.

© 2026 BenchChem. All rights reserved.

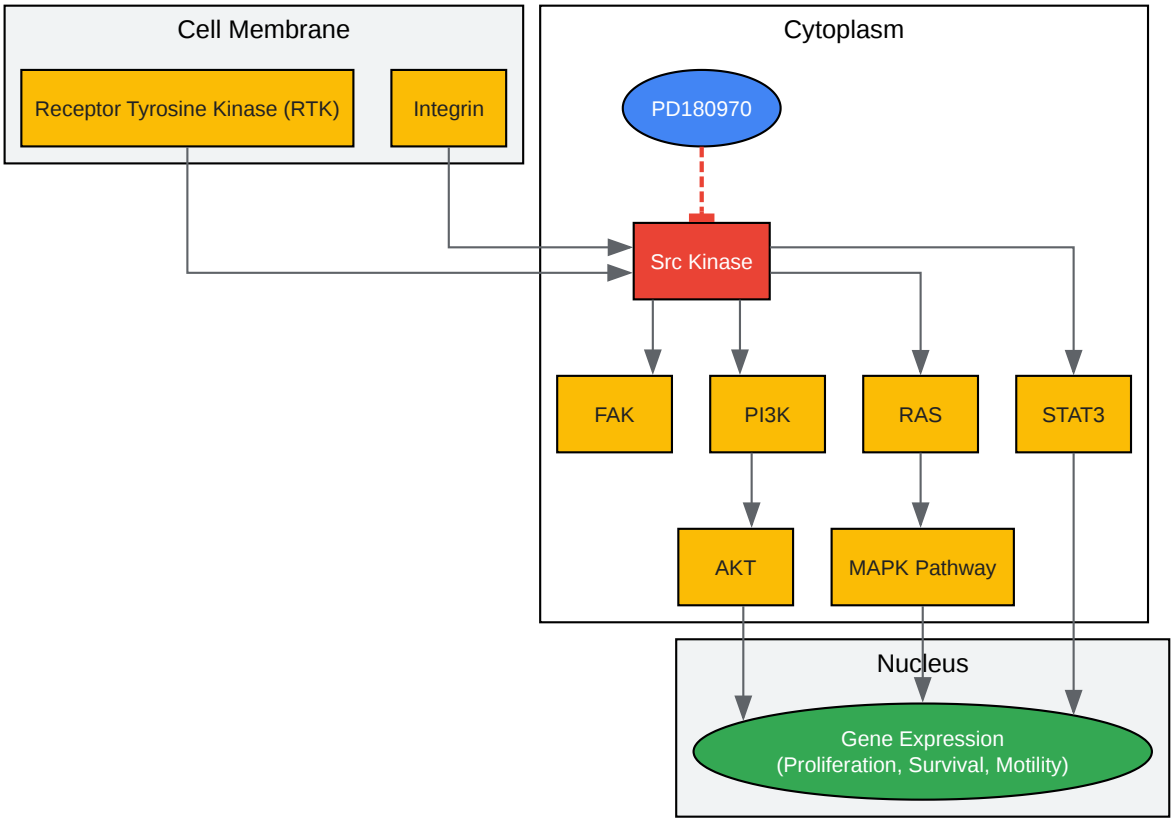

Click to download full resolution via product page

Src Signaling Pathway and Inhibition by **PD180970**.

Experimental Protocols

The following protocols provide detailed methodologies for key in vitro experiments to determine the optimal concentration and cellular effects of **PD180970**.

1. In Vitro Bcr-Abl Kinase Autophosphorylation Assay (Non-Radioactive, ELISA-based)

This assay measures the autophosphorylation of Bcr-Abl in a cell-free system, allowing for the direct determination of the IC_{50} of **PD180970** against the kinase.

- Materials:

© 2026 BenchChem. All rights reserved.

- Recombinant Bcr-Abl kinase
- Kinase buffer (e.g., 50 mM Tris-HCl pH 7.5, 10 mM $MgCl_2$, 1 mM DTT)
- ATP
- **PD180970**
- 96-well high-binding microplate
- Wash buffer (e.g., PBS with 0.05% Tween-20)
- Blocking buffer (e.g., 1% BSA in PBS)
- Anti-phosphotyrosine antibody (e.g., 4G10)
- HRP-conjugated secondary antibody
- TMB substrate
- Stop solution (e.g., 2N H_2SO_4)
- Plate reader

- Procedure:
  - Coat a 96-well microplate with recombinant Bcr-Abl kinase overnight at 4°C.
  - Wash the plate three times with wash buffer.
  - Block the plate with blocking buffer for 1 hour at room temperature.
  - Prepare a serial dilution of **PD180970** in kinase buffer.
  - Add the diluted **PD180970** or vehicle control (DMSO) to the wells and incubate for 30 minutes at room temperature.
  - Initiate the kinase reaction by adding ATP to a final concentration of 10 µM.

© 2026 BenchChem. All rights reserved.

- Incubate for 1 hour at 30°C.
- Wash the plate three times with wash buffer.
- Add the anti-phosphotyrosine antibody and incubate for 1 hour at room temperature.
- Wash the plate three times with wash buffer.
- Add the HRP-conjugated secondary antibody and incubate for 1 hour at room temperature.
- Wash the plate five times with wash buffer.
- Add TMB substrate and incubate in the dark until a blue color develops.
- Stop the reaction with the stop solution.
- Read the absorbance at 450 nm using a plate reader.
- Calculate the percentage of inhibition for each **PD180970** concentration and determine the IC_{50} value using a dose-response curve.

2. Cellular Phosphorylation Assay in K562 Cells (Western Blot)

This protocol details the assessment of **PD180970**'s ability to inhibit the phosphorylation of the Bcr-Abl substrate CrkL in the CML cell line K562.

- Materials:
  - K562 cells
  - RPMI-1640 medium with 10% FBS
  - **PD180970**
  - DMSO (vehicle control)
  - Lysis buffer (e.g., RIPA buffer with protease and phosphatase inhibitors)

© 2026 BenchChem. All rights reserved.

- BCA protein assay kit
- SDS-PAGE gels
- PVDF membrane
- Transfer buffer
- Blocking buffer (e.g., 5% non-fat dry milk or BSA in TBST)
- Primary antibodies: anti-phospho-CrkL (Tyr207) and anti-CrkL
- HRP-conjugated secondary antibody
- ECL substrate
- Chemiluminescence imaging system

- Procedure:
  - Seed K562 cells at a density of 1 x 10^6 cells/mL and allow them to grow overnight.
  - Treat the cells with a serial dilution of **PD180970** or DMSO for 2-4 hours.
  - Harvest the cells by centrifugation and wash once with ice-cold PBS.
  - Lyse the cells in lysis buffer on ice for 30 minutes.
  - Clarify the lysates by centrifugation at 14,000 x g for 15 minutes at 4°C.
  - Determine the protein concentration of the supernatants using a BCA assay.
  - Denature equal amounts of protein by boiling in Laemmli sample buffer.
  - Separate the proteins by SDS-PAGE and transfer them to a PVDF membrane.
  - Block the membrane with blocking buffer for 1 hour at room temperature.
  - Incubate the membrane with the anti-phospho-CrkL primary antibody overnight at 4°C.

© 2026 BenchChem. All rights reserved.

- Wash the membrane three times with TBST.
- Incubate with the HRP-conjugated secondary antibody for 1 hour at room temperature.
- Wash the membrane three times with TBST.
- Visualize the bands using an ECL substrate and a chemiluminescence imaging system.
- Strip the membrane and re-probe with the anti-CrkL antibody to confirm equal loading.
- Quantify the band intensities to determine the concentration-dependent inhibition of CrkL phosphorylation.

3. Apoptosis Assay in K562 Cells (Annexin V Staining and Flow Cytometry)

This assay quantifies the induction of apoptosis in K562 cells following treatment with **PD180970**.

- Materials:
  - K562 cells
  - RPMI-1640 medium with 10% FBS
  - **PD180970**
  - DMSO (vehicle control)
  - Annexin V-FITC Apoptosis Detection Kit (containing Annexin V-FITC, Propidium Iodide (PI), and binding buffer)
  - Flow cytometer
- Procedure:
  - Seed K562 cells at a density of 0.5 x 10^6 cells/mL.
  - Treat the cells with the desired concentrations of **PD180970** or DMSO for 24-48 hours.

© 2026 BenchChem. All rights reserved.

- Harvest the cells by centrifugation and wash once with ice-cold PBS.
- Resuspend the cells in 1X binding buffer at a concentration of 1 x 10^6 cells/mL.
- Add 5 µL of Annexin V-FITC and 5 µL of PI to 100 µL of the cell suspension.
- Incubate the cells in the dark for 15 minutes at room temperature.
- Add 400 µL of 1X binding buffer to each sample.
- Analyze the samples by flow cytometry within 1 hour.
- Quantify the percentage of cells in early apoptosis (Annexin V-positive, PI-negative) and late apoptosis/necrosis (Annexin V-positive, PI-positive).

Experimental Workflow

The following diagram outlines a logical workflow for determining the optimal in vitro concentration of **PD180970**.

© 2026 BenchChem. All rights reserved.

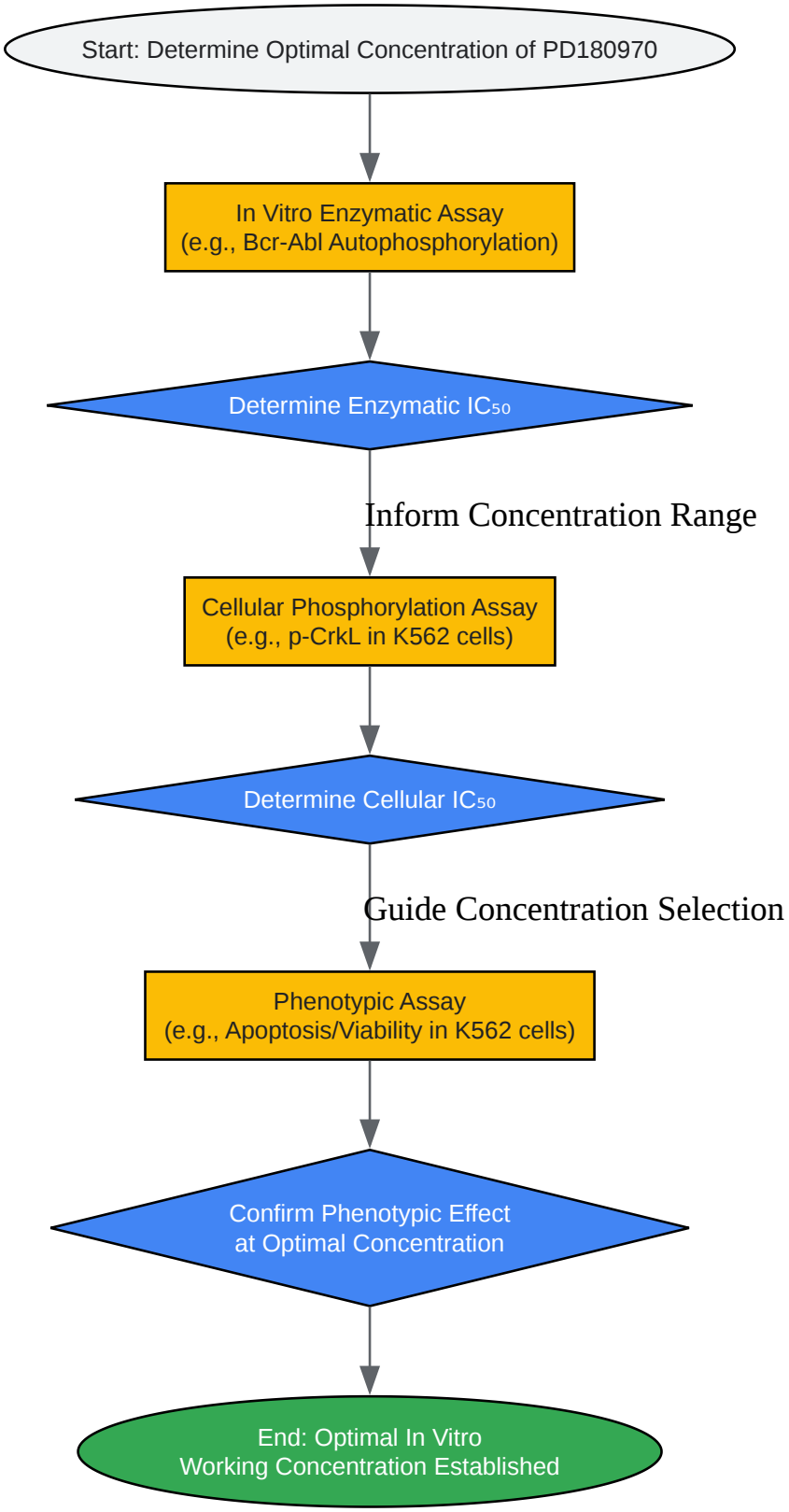

Click to download full resolution via product page

Workflow for Determining Optimal **PD180970** Concentration.

© 2026 BenchChem. All rights reserved.

Conclusion

The data and protocols presented in this document provide a comprehensive guide for researchers working with the kinase inhibitor **PD180970**. By utilizing the provided IC_{50} values as a starting point and following the detailed experimental protocols, scientists can confidently determine the optimal in vitro concentrations of **PD180970** for their specific research applications. This will enable robust and reproducible experiments to further elucidate the biological effects and therapeutic potential of this compound.

Need Custom Synthesis?

BenchChem offers custom synthesis for rare earth carbides and specific isotopiclabeling.

Email: info@benchchem.com or Request Quote Online.

References

- 1. Anti-CrkL (phospho Tyr207) Antibody (A89607) | Antibodies.com [antibodies.com]
- 2. Frontiers | Evaluating STAT5 Phosphorylation as a Mean to Assess T Cell Proliferation [frontiersin.org]
- 3. Phospho-CrkL (Tyr207) Polyclonal Antibody (PA5-143674) [thermofisher.com]
- 4. Flow cytometric measurement of STAT5 phosphorylation to assess the activity of common γ chain cytokines i... [protocols.io]
- 5. A Cell-Based Assay for Measuring Endogenous BcrAbl Kinase Activity and Inhibitor Resistance - PMC [pmc.ncbi.nlm.nih.gov]
- To cite this document: BenchChem. [Optimal Concentration of PD180970 for In Vitro Assays: Application Notes and Protocols]. BenchChem, [2026]. [Online PDF]. Available at: [https://www.benchchem.com/product/b1684433/docs#optimal-concentration-of-pd180970-for-in-vitro-assays-application-notes-and-protocols]

Disclaimer & Data Validity:

The information provided in this document is for Research Use Only (RUO) and is strictly not intended for diagnostic or therapeutic procedures. While BenchChem strives to provide

accurate protocols, we make no warranties, express or implied, regarding the fitness of this product for every specific experimental setup.

Technical Support: The protocols provided are for reference purposes. Unsure if this reagent suits your experiment?

Need Industrial/Bulk Grade? Request Custom Synthesis Quote

BenchChem

Our mission is to be the trusted global source of essential and advanced chemicals, empowering scientists and researchers to drive progress in science and industry.

Contact

Address: 3281 E Guasti Rd

Ontario, CA 91761, United States

Phone: (601) 213-4426

Email: info@benchchem.com

Contact our Ph.D. Support Team for a compatibility check

© 2026 BenchChem. All rights reserved.