ZM 306416 off-target effects in experiments

Author: BenchChem Technical Support Team. **Date**: April 2026

Compound of Interest	
Compound Name:	*ZM 306416*
CAS No.:	*690206-97-4*
Cat. No.:	*B1683844*

Get Quote

Technical Support Center: ZM 306416

This technical support center provides researchers, scientists, and drug development professionals with essential information regarding the use of **ZM 306416** in experiments, with a focus on understanding and mitigating its off-target effects.

Frequently Asked Questions (FAQs)

Q1: What is the primary target of **ZM 306416**?

ZM 306416 is a potent inhibitor of Vascular Endothelial Growth Factor Receptors (VEGFRs).[1][2][3][4] It primarily targets VEGFR1 (Flt) and VEGFR2 (KDR), key mediators in the VEGF signaling pathway which is crucial for angiogenesis and vasculogenesis.[4][5]

Q2: What are the known major off-target effects of **ZM 306416**?

The most significant off-target effect of **ZM 306416** is the potent inhibition of the Epidermal Growth Factor Receptor (EGFR) with an IC50 value of less than 10 nM.[1][2][4] This is substantially more potent than its inhibition of VEGFR1. It has also been shown to inhibit other kinases such as Src and Abl at higher concentrations.[1][4]

© 2026 BenchChem. All rights reserved.

Q3: How can I account for the EGFR inhibition in my experiments?

To dissect the effects of **ZM 306416** on VEGFR versus EGFR signaling, it is crucial to use appropriate controls. This can include using cell lines with known EGFR status (e.g., wild-type vs. mutant/addicted) or co-treatment with a highly selective EGFR inhibitor to isolate the VEGFR-specific effects.[1] Comparing results from EGFR-addicted non-small cell lung cancer (NSCLC) cell lines like H3255 and HCC4011 with wild-type EGFR cell lines such as A549 can help differentiate these effects.[1]

Q4: What are the downstream signaling pathways affected by **ZM 306416**?

By inhibiting VEGFR and EGFR, **ZM 306416** can impact several downstream signaling cascades. Notably, it has been observed to cause a marked inhibition of the phosphorylation of p42/44 MAPK (ERK1/2) without affecting the total expression of the unphosphorylated form.[2] [4] Both VEGFR and EGFR signaling pathways converge on the MAPK and PI3K/Akt pathways.[5]

Troubleshooting Guide

Issue 1: Unexpectedly high levels of apoptosis or cell death in my cell line.

- Possible Cause: The observed cytotoxicity may be due to the potent off-target inhibition of EGFR, especially in cell lines that are dependent on EGFR signaling for survival.[1] **ZM 306416** has been shown to significantly increase cell death in human thyroid follicular cells at a concentration of 3 µM.[4]

- Troubleshooting Steps:

  - Review Cell Line Sensitivity: Check the literature for the EGFR status of your cell line. EGFR-dependent cancer cells are particularly sensitive to **ZM 306416**.[1]

  - Dose-Response Curve: Perform a dose-response experiment to determine the cytotoxic IC50 in your specific cell line. You may need to use a lower concentration to achieve selective VEGFR inhibition without significant cytotoxicity.

  - Use Control Inhibitors: Compare the effects of **ZM 306416** with a more selective VEGFR inhibitor (e.g., ZM 323881) and a selective EGFR inhibitor to understand which pathway is

© 2026 BenchChem. All rights reserved.

driving the observed cell death.

Issue 2: Inconsistent or unexpected effects on angiogenesis in my model.

- Possible Cause: The dual inhibition of VEGFR and EGFR can lead to complex and sometimes counterintuitive effects on angiogenesis. While VEGFR inhibition is anti-angiogenic, EGFR signaling can also influence the tumor microenvironment and angiogenesis.

- Troubleshooting Steps:

  - Concentration Optimization: The concentration of **ZM 306416** is critical. At lower concentrations, you may achieve more selective VEGFR inhibition, while at higher concentrations, the potent EGFR inhibition will dominate.

  - Analyze Key Angiogenic Factors: Measure the expression of key angiogenic factors like VEGF and Placental Growth Factor (PlGF). **ZM 306416** has been noted to weakly inhibit VEGF secretion but increase PlGF production.[4]

  - Phenotypic Assays: Utilize specific angiogenesis assays (e.g., tube formation assay, aortic ring assay) and carefully quantify the results at different concentrations of **ZM 306416**.

Quantitative Data Summary

The following tables summarize the inhibitory activity of **ZM 306416** against its primary targets and key off-targets.

Table 1: Inhibitory Activity (IC50) of **ZM 306416** against Key Kinases

© 2026 BenchChem. All rights reserved.

Target	IC50 Value	Reference
VEGFR1 (Flt)	0.33 µM	[1][4]
VEGFR2 (KDR)	100 nM	[1]
EGFR	< 10 nM	[1][2][4]
Src	0.33 µM	[1]
Abl	1.3 µM	[1]

Table 2: Anti-proliferative Activity (IC50) of **ZM 306416** in Cancer Cell Lines

Cell Line	EGFR Status	IC50 Value	Reference
H3255 (NSCLC)	Addicted	0.09 µM	[1]
HCC4011 (NSCLC)	Addicted	0.072 µM	[1]
A549 (NSCLC)	Wild-type	> 10 µM	[1]
H2030 (NSCLC)	Wild-type	> 10 µM	[1]

Experimental Protocols

1. General Kinase Inhibition Assay (In Vitro)

This protocol provides a general framework for assessing the inhibitory activity of **ZM 306416** against a specific kinase.

- Materials:
  - Recombinant kinase
  - Kinase-specific substrate
  - ATP
  - Assay buffer (typically contains Tris-HCl, MgCl2, DTT)

© 2026 BenchChem. All rights reserved.

- **ZM 306416** stock solution (in DMSO)
- Kinase detection reagent (e.g., ADP-Glo™, Z'-LYTE™)
- Microplate reader

- Procedure:
  - Prepare serial dilutions of **ZM 306416** in assay buffer.
  - In a microplate, add the recombinant kinase, the kinase substrate, and the diluted **ZM 306416**.
  - Initiate the kinase reaction by adding ATP.
  - Incubate at the optimal temperature and time for the specific kinase.
  - Stop the reaction and add the kinase detection reagent according to the manufacturer's instructions.
  - Measure the signal (e.g., luminescence, fluorescence) using a microplate reader.
  - Calculate the percent inhibition for each concentration of **ZM 306416** and determine the IC50 value.

2. Western Blot for Phosphorylated Protein Analysis

This protocol is for detecting changes in the phosphorylation state of downstream signaling proteins like p42/44 MAPK.

- Materials:
  - Cells treated with **ZM 306416**
  - Lysis buffer (e.g., RIPA buffer with protease and phosphatase inhibitors)
  - Protein quantification assay (e.g., BCA assay)
  - SDS-PAGE gels

© 2026 BenchChem. All rights reserved.

- Transfer buffer and membrane (PVDF or nitrocellulose)
- Blocking buffer (e.g., 5% BSA or non-fat milk in TBST)
- Primary antibodies (e.g., anti-phospho-p42/44 MAPK, anti-total-p42/44 MAPK)
- HRP-conjugated secondary antibody
- Chemiluminescent substrate
- Imaging system

- Procedure:
  - Treat cells with the desired concentrations of **ZM 306416** for the specified time.
  - Lyse the cells and collect the protein lysate.
  - Quantify the protein concentration.
  - Separate the proteins by SDS-PAGE and transfer them to a membrane.
  - Block the membrane to prevent non-specific antibody binding.
  - Incubate the membrane with the primary antibody overnight at 4°C.
  - Wash the membrane and incubate with the HRP-conjugated secondary antibody.
  - Wash the membrane again and add the chemiluminescent substrate.
  - Capture the signal using an imaging system.
  - Quantify the band intensities to determine the relative change in protein phosphorylation.

Visualizations

© 2026 BenchChem. All rights reserved.

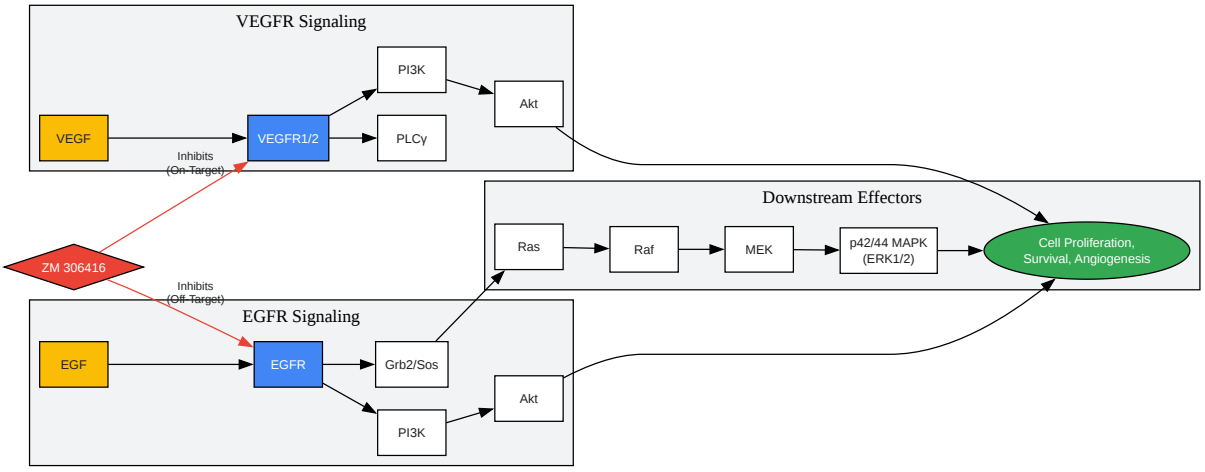

Click to download full resolution via product page

Caption: **ZM 306416** inhibits both VEGFR and EGFR signaling pathways.

© 2026 BenchChem. All rights reserved.

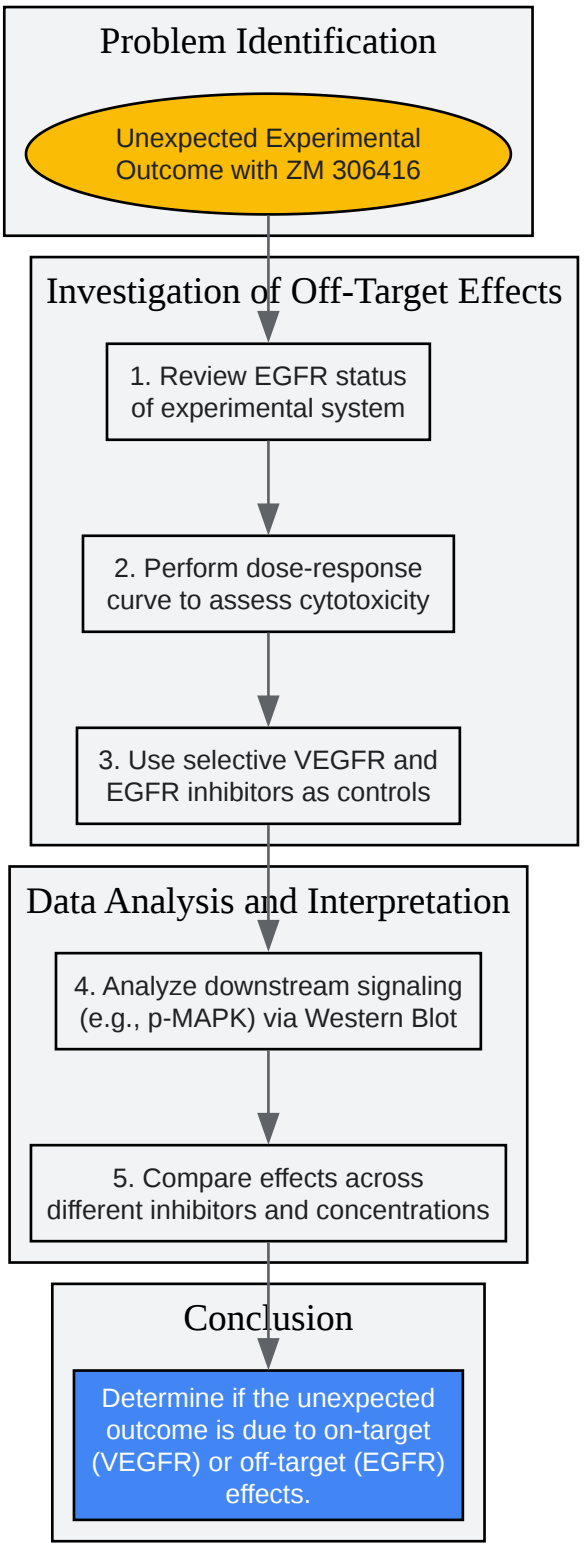

Click to download full resolution via product page

Caption: Troubleshooting workflow for **ZM 306416** off-target effects.

© 2026 BenchChem. All rights reserved.

Need Custom Synthesis?

BenchChem offers custom synthesis for rare earth carbides and specific isotopiclabeling.

Email: info@benchchem.com or Request Quote Online.

References

- 1. medchemexpress.com [medchemexpress.com]
- 2. apexbt.com [apexbt.com]
- 3. ZM 306416 | CAS 690206-97-4 | VEGFR kinase inhibitor [stressmarq.com]
- 4. selleckchem.com [selleckchem.com]
- 5. ZM306416 hydrochloride, VEGFR1/2 tyrosine kinase activity inhibitor (CAS 690206-97-4) | Abcam [abcam.com]

- To cite this document: BenchChem. [ZM 306416 off-target effects in experiments]. BenchChem, [2026]. [Online PDF]. Available at: [https://www.benchchem.com/product/b1683844/docs#zm-306416-off-target-effects-in-experiments]

Disclaimer & Data Validity:

The information provided in this document is for Research Use Only (RUO) and is strictly not intended for diagnostic or therapeutic procedures. While BenchChem strives to provide accurate protocols, we make no warranties, express or implied, regarding the fitness of this product for every specific experimental setup.

Technical Support: The protocols provided are for reference purposes. Unsure if this reagent suits your experiment?

Need Industrial/Bulk Grade? Request Custom Synthesis Quote

© 2026 BenchChem. All rights reserved.

BenchChem

Our mission is to be the trusted global source of essential and advanced chemicals, empowering scientists and researchers to drive progress in science and industry.

Contact

Address: 3281 E Guasti Rd

Ontario, CA 91761, United States

Phone: (601) 213-4426

Email: info@benchchem.com

Contact our Ph.D. Support Team for a compatibility check

© 2026 BenchChem. All rights reserved.