Vrt 043198 stability and storage recommendations

Author: BenchChem Technical Support Team. **Date**: April 2026

Compound of Interest	
Compound Name:	*Vrt 043198*
CAS No.:	*244133-31-1*
Cat. No.:	*B1683865*

Get Quote

VRT-043198 Technical Support Center

This technical support center provides researchers, scientists, and drug development professionals with comprehensive information on the stability and storage of VRT-043198, along with troubleshooting guides and frequently asked questions to facilitate its effective use in experiments.

Frequently Asked Questions (FAQs)

Q1: What is VRT-043198 and what is its mechanism of action?

A1: VRT-043198 is the active metabolite of the prodrug Belnacasan (VX-765).[1] It is a potent and selective inhibitor of caspase-1 and caspase-4.[1] VRT-043198 functions by forming a reversible covalent bond with the catalytic cysteine residue in the active site of these caspases.[1] This action blocks the proteolytic processing and release of pro-inflammatory cytokines IL-1β and IL-18, which are key mediators of inflammation.[1]

Q2: What is the relationship between VRT-043198 and Belnacasan (VX-765)?

© 2026 BenchChem. All rights reserved.

A2: Belnacasan (VX-765) is a prodrug that is converted to its active form, VRT-043198, by esterases in the body.[1] For research purposes, this conversion can be mimicked in vitro through acid hydrolysis.[1]

Q3: How should I store VRT-043198?

A3: Proper storage of VRT-043198 is crucial for maintaining its integrity and activity. Recommendations for both solid form and solutions are provided in the tables below.

Storage and Stability Data

Solid Form Storage Recommendations

Storage Condition	Duration	Notes
-20°C	3 years[2]	Recommended for long-term storage.
4°C	2 years[2]	Suitable for shorter-term storage.
Room Temperature	Shipped at room temperature[2]	Stable for short periods, but long-term storage at room temperature is not recommended.

Solution Storage Recommendations

Solvent	Storage Condition	Duration	Notes
DMSO	-80°C	6 months[3]	Aliquot to avoid repeated freeze-thaw cycles.
DMSO	-20°C	1 month[3]	Aliquot to avoid repeated freeze-thaw cycles.

Aqueous Stability

© 2026 BenchChem. All rights reserved.

VRT-043198 exhibits pH-dependent stability in aqueous solutions. A study on its aqueous stability over 100 hours at 23°C revealed the following:

- Neutral (pH 7) and Acidic (pH 2) Conditions: VRT-043198 is very stable.[4]
- Basic (pH 8) Conditions: VRT-043198 shows moderate degradation.[4]

Researchers should consider these stability profiles when designing experiments involving aqueous buffers.

Troubleshooting Guide

Issue	Possible Cause	Recommendation
Precipitation in aqueous buffer	Low aqueous solubility.	Prepare a high-concentration stock solution in an organic solvent like DMSO and then dilute it into your aqueous buffer. Ensure the final concentration of the organic solvent is compatible with your experimental system.
Inconsistent experimental results	Compound degradation due to improper storage or handling.	Aliquot stock solutions into single-use volumes to minimize freeze-thaw cycles. Store solutions at the recommended temperatures.
Unexpected biological effects	Formation of degradation products.	Use freshly prepared solutions whenever possible. If unexpected results persist, consider analyzing the purity of your compound stock.

Experimental Protocols

© 2026 BenchChem. All rights reserved.

In Vitro Conversion of Belnacasan (VX-765) to VRT-043198

This protocol describes the in vitro hydrolysis of Belnacasan to generate VRT-043198.

Materials:

- Belnacasan (VX-765)
- Tetrahydrofuran (THF)
- Water
- Dilute hydrochloric acid (HCl)

Methodology:

- Dissolution: Dissolve Belnacasan in a mixture of THF and water.[1]
- Acid Hydrolysis: Add dilute HCl to the solution to catalyze the hydrolysis of the ethoxydihydrofuranone moiety.[1]
- Reaction Monitoring: Monitor the reaction progress using an appropriate analytical technique such as thin-layer chromatography (TLC) or liquid chromatography-mass spectrometry (LC-MS) to confirm the complete conversion to VRT-043198.[1]
- Purification: Once the reaction is complete, purify the resulting VRT-043198 using a suitable method like column chromatography.

Caspase-1 Inhibition Assay

This fluorometric assay determines the inhibitory activity of VRT-043198 against purified caspase-1.

Materials:

- VRT-043198

© 2026 BenchChem. All rights reserved.

- Recombinant caspase-1
- Fluorogenic caspase-1 substrate (e.g., Ac-YVAD-AMC)
- Assay buffer
- 96-well black microplates
- Fluorometric plate reader

Methodology:

- Compound Preparation: Prepare serial dilutions of VRT-043198 in the assay buffer.
- Enzyme Preparation: Dilute recombinant caspase-1 to the desired concentration in the assay buffer.
- Incubation: In a 96-well plate, add the diluted caspase-1 and the serially diluted VRT-043198. Incubate at room temperature for 15-30 minutes to allow for inhibitor binding.
- Substrate Addition: Add the fluorogenic caspase-1 substrate to each well to initiate the reaction.
- Measurement: Immediately begin measuring the fluorescence intensity at regular intervals using a fluorometric plate reader.
- Data Analysis: Calculate the reaction rate for each VRT-043198 concentration. Plot the reaction rates against the inhibitor concentrations and fit the data to a dose-response curve to determine the IC50 value.

Visualizations

© 2026 BenchChem. All rights reserved.

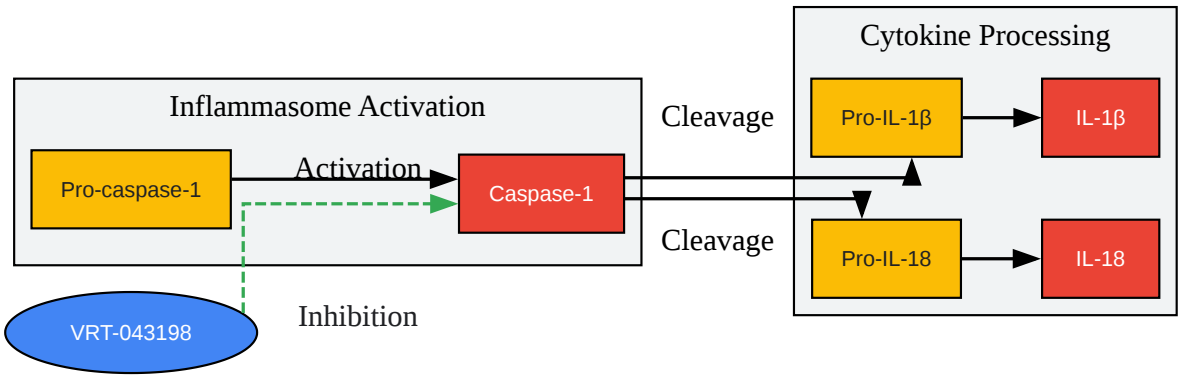

Click to download full resolution via product page

Caption: Mechanism of VRT-043198 inhibition of caspase-1 and subsequent cytokine processing.

© 2026 BenchChem. All rights reserved.

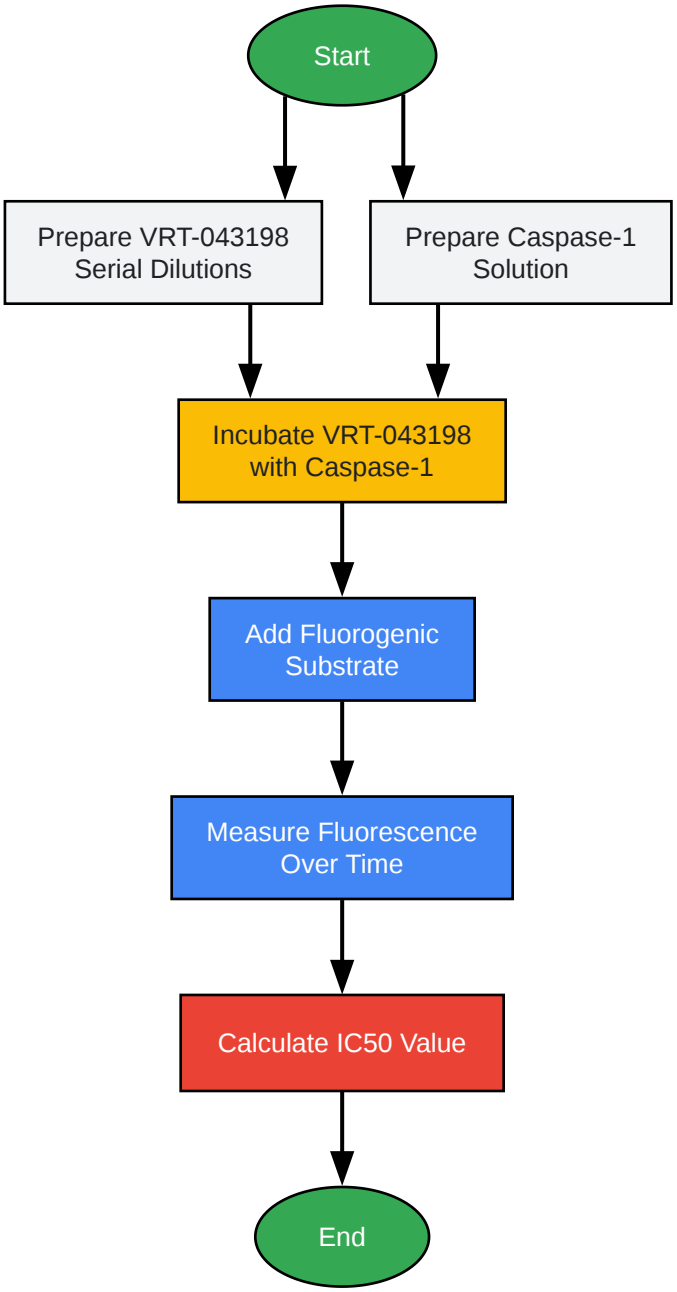

Click to download full resolution via product page

Caption: General experimental workflow for a caspase-1 inhibition assay using VRT-043198.

Need Custom Synthesis?

BenchChem offers custom synthesis for rare earth carbides and specific isotopiclabeling.

Email: info@benchchem.com or Request Quote Online.

References

- 1. benchchem.com [benchchem.com]
- 2. VRT-043198 - Immunomart [immunomart.com]
- 3. medchemexpress.com [medchemexpress.com]
- 4. benchchem.com [benchchem.com]
- To cite this document: BenchChem. [Vrt 043198 stability and storage recommendations]. BenchChem, [2026]. [Online PDF]. Available at: [https://www.benchchem.com/product/b1683865/docs#vrt-043198-stability-and-storage-recommendations]

Disclaimer & Data Validity:

The information provided in this document is for Research Use Only (RUO) and is strictly not intended for diagnostic or therapeutic procedures. While BenchChem strives to provide accurate protocols, we make no warranties, express or implied, regarding the fitness of this product for every specific experimental setup.

Technical Support: The protocols provided are for reference purposes. Unsure if this reagent suits your experiment?

Need Industrial/Bulk Grade? Request Custom Synthesis Quote

BenchChem

Our mission is to be the trusted global source of essential and advanced chemicals, empowering scientists and researchers to drive progress in science and industry.

Contact

Address: 3281 E Guasti Rd

Ontario, CA 91761, United States

Phone: (601) 213-4426

Email: info@benchchem.com

© 2026 BenchChem. All rights reserved.

Contact our Ph.D. Support Team for a compatibility check

© 2026 BenchChem. All rights reserved.