# Application Notes and Protocols: Experimental Design for Cholestasis Studies with WAY-361789

**Author**: BenchChem Technical Support Team. **Date**: April 2026

***Compound of Interest***

| | |
|---|---|
| *Compound Name:* | *WAY-361789* |
| *CAS No.:* | *1040718-40-8* |
| *Cat. No.:* | *B1683282* |

*Get Quote*

Audience: Researchers, scientists, and drug development professionals.

Introduction Cholestasis is a condition characterized by the impairment of bile flow from the liver, leading to the accumulation of toxic bile acids, inflammation, and progressive liver damage.[1][2][3] The Farnesoid X Receptor (FXR), a nuclear receptor highly expressed in the liver and intestine, is a key regulator of bile acid homeostasis.[4][5] Natural bile acids are the endogenous ligands for FXR.[5] Its activation transcriptionally regulates a suite of genes involved in bile acid synthesis, transport, and metabolism, making it a prime therapeutic target for cholestatic liver diseases.[6][7] **WAY-361789** (also known as WAY-362450) is a potent, selective, non-steroidal FXR agonist that has demonstrated therapeutic potential in preclinical models of liver disease by reducing inflammation and fibrosis.[8][9][10] These application notes provide a comprehensive framework for designing and executing preclinical studies to evaluate the efficacy of **WAY-361789** in a mouse model of obstructive cholestasis.

## Mechanism of Action: FXR Signaling Pathway

**WAY-361789** acts as an agonist for the Farnesoid X Receptor. Upon binding, FXR forms a heterodimer with the Retinoid X Receptor (RXR).[5] This complex then translocates to the

© 2026 BenchChem. All rights reserved.

nucleus and binds to specific DNA sequences known as FXR response elements (FXREs) in the promoter regions of target genes.[10] This binding modulates the transcription of genes crucial for bile acid homeostasis. Key effects include the induction of the Small Heterodimer Partner (SHP), which in turn inhibits Cholesterol 7α-hydroxylase (CYP7A1), the rate-limiting enzyme in bile acid synthesis.[5] Simultaneously, FXR activation upregulates the expression of transporters like the Bile Salt Export Pump (BSEP), which facilitates the efflux of bile acids from hepatocytes into the bile canaliculi.[11] This dual action—reducing synthesis and promoting excretion—helps to lower the intracellular concentration of cytotoxic bile acids.

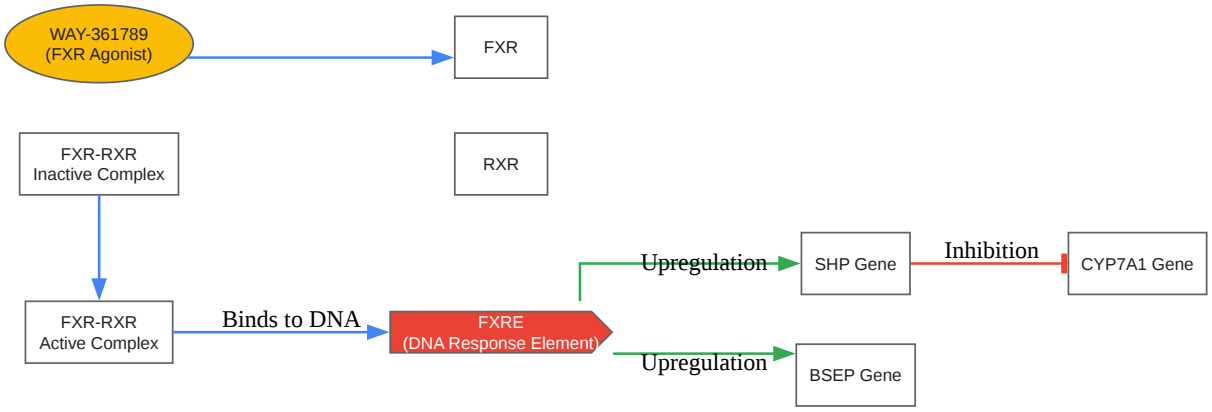


Click to download full resolution via product page

**Caption:** FXR signaling pathway activated by **WAY-361789**.

# Experimental Design and Workflow

A robust experimental design is critical for evaluating the therapeutic efficacy of **WAY-361789**. The most common and well-characterized model for obstructive cholestasis is bile duct ligation (BDL) in mice.[12][13][14] This surgical procedure induces a reproducible liver injury characterized by inflammation and fibrosis, mimicking aspects of human cholestatic disease.[14] The following workflow outlines the key stages of a typical study.

© 2026 BenchChem. All rights reserved.

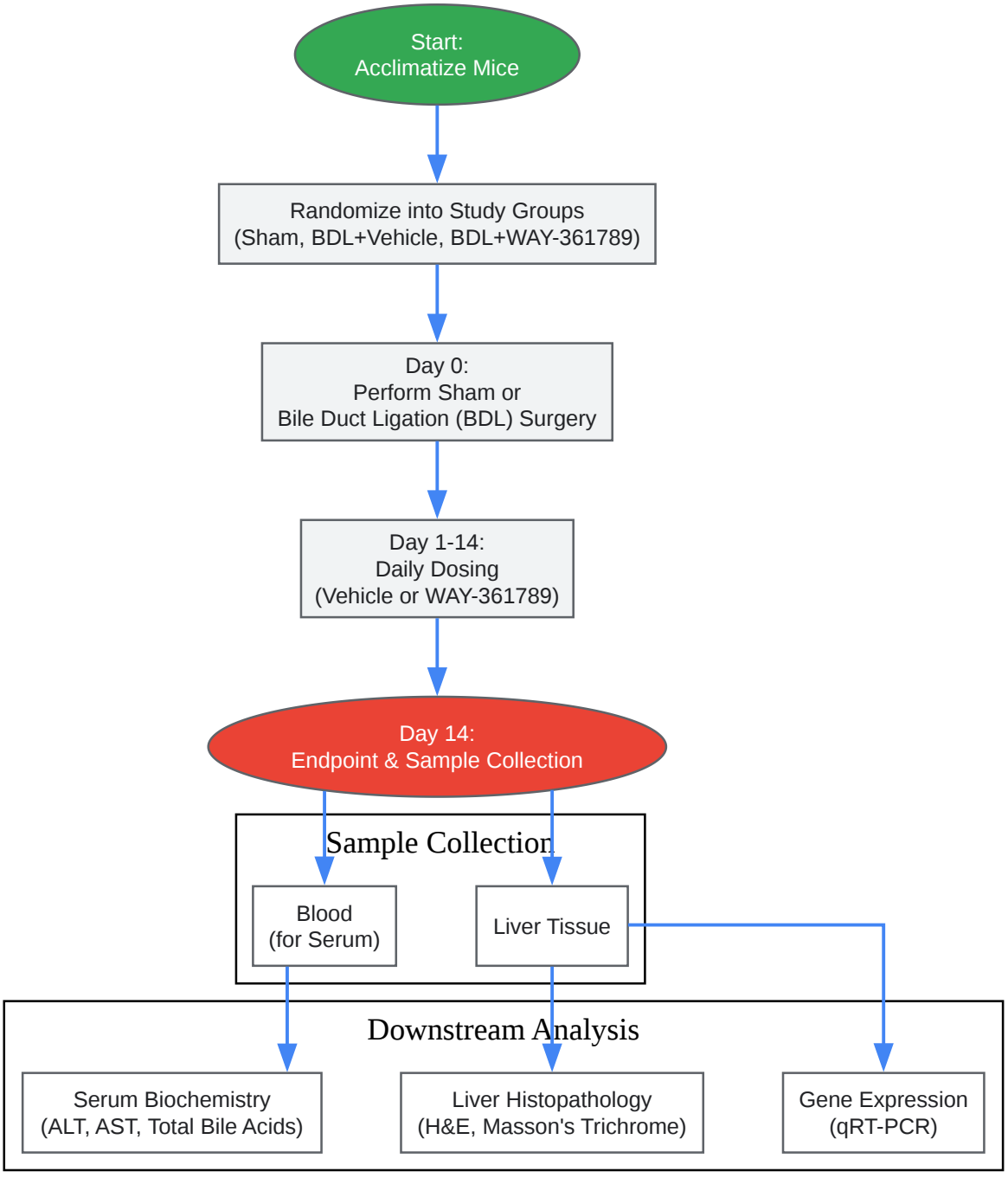


Click to download full resolution via product page

**Caption:** Experimental workflow for a cholestasis study.

# Protocols

## Protocol 1: Bile Duct Ligation (BDL) Model in Mice

© 2026 BenchChem. All rights reserved.

This protocol describes the surgical procedure for inducing obstructive cholestasis.[13][14]

Materials:

- Male C57BL/6 mice (8-10 weeks old)
- Anesthesia (e.g., isoflurane)
- Surgical board with a heating pad (37°C)
- Sterile surgical instruments (scissors, forceps)
- 4-0 silk surgical suture
- Wound clips or sutures for closing the incision
- 70% ethanol and povidone-iodine for sterilization
- Post-operative analgesic (e.g., buprenorphine)

Procedure:

- Anesthetize the mouse using isoflurane (5% for induction, 1.5-2% for maintenance). Confirm proper anesthetic depth by lack of pedal reflex.
- Place the mouse in a supine position on the heated surgical board.
- Shave the abdominal area and sterilize the skin with povidone-iodine followed by 70% ethanol.
- Make a midline laparotomy incision (~1.5 cm) through the skin and abdominal muscle to expose the peritoneal cavity.[13]
- Gently retract the liver superiorly to visualize the common bile duct.
- Carefully isolate the common bile duct from the surrounding tissue using blunt forceps.
- Double-ligate the common bile duct with 4-0 silk suture. The first ligature should be placed proximally (near the liver) and the second distally.

© 2026 BenchChem. All rights reserved.

- For the Sham control group, perform the same procedure including isolation of the common bile duct, but do not ligate it.[15]
- Close the abdominal wall with sutures and the skin with wound clips.
- Administer a subcutaneous injection of sterile saline for fluid replacement and an analgesic for pain management.
- Allow the mouse to recover on a heating pad until fully ambulatory. Monitor animals daily post-surgery.

## Protocol 2: Serum Biochemical Analysis

Materials:

- Blood collection tubes (e.g., microtainer serum separator tubes)
- Centrifuge
- Commercially available assay kits for:
  - Total Bile Acids (TBA)[16][17][18]
  - Alanine Aminotransferase (ALT)
  - Aspartate Aminotransferase (AST)
- Microplate reader

Procedure:

- At the study endpoint, collect blood via cardiac puncture from anesthetized mice.
- Dispense blood into serum separator tubes.
- Allow blood to clot at room temperature for 30 minutes.
- Centrifuge at 2,000 x g for 10 minutes at 4°C to separate the serum.

© 2026 BenchChem. All rights reserved.

- Carefully collect the supernatant (serum) and store at -80°C until analysis.
- Perform the TBA, ALT, and AST assays according to the manufacturer's instructions for the selected commercial kits.[19][20]

## Protocol 3: Liver Histopathology

Materials:

- 10% neutral buffered formalin
- Paraffin wax
- Microtome
- Glass slides
- Staining reagents:
  - Hematoxylin and Eosin (H&E)
  - Masson's Trichrome stain

Procedure:

- At the study endpoint, harvest the entire liver and wash with cold phosphate-buffered saline (PBS).
- Fix a section of the largest liver lobe in 10% neutral buffered formalin for 24 hours.
- Dehydrate the fixed tissue through a series of graded ethanol solutions, clear with xylene, and embed in paraffin wax.
- Section the paraffin blocks into 5 µm thick sections using a microtome and mount on glass slides.
- Deparaffinize and rehydrate the sections.

© 2026 BenchChem. All rights reserved.

- H&E Staining: Stain with Hematoxylin and Eosin to assess general liver architecture, inflammation, and necrosis.[21]
- Masson's Trichrome Staining: Perform Masson's Trichrome staining to visualize collagen deposition and assess the degree of fibrosis (collagen stains blue).[21]
- Dehydrate, clear, and mount the stained slides with a coverslip.
- Examine slides under a microscope. Histological features of cholestasis include portal inflammation, bile duct proliferation, and pericellular fibrosis.[22][23]

## Protocol 4: Quantitative Real-Time PCR (qRT-PCR)

Materials:

- RNase-free tubes and reagents
- Tissue homogenizer
- RNA extraction kit (e.g., TRIzol or column-based kits)
- Spectrophotometer (e.g., NanoDrop)
- cDNA synthesis kit
- SYBR Green or TaqMan-based qPCR master mix
- Gene-specific primers (mouse) for Fxr, Shp, Bsep, Cyp7a1, Acta2 (α-SMA), Col1a1, and a housekeeping gene (e.g., Gapdh or Actb).
- qPCR instrument

Procedure:

- RNA Extraction:
  - Snap-freeze a portion of the liver tissue in liquid nitrogen immediately after harvest and store at -80°C.

© 2026 BenchChem. All rights reserved.

- Homogenize ~50-100 mg of frozen liver tissue in lysis buffer (e.g., TRIzol).[24]
- Extract total RNA according to the manufacturer's protocol.[25][26]
- Assess RNA quantity and purity (A260/280 ratio ~2.0) using a spectrophotometer.

- cDNA Synthesis:
  - Reverse transcribe 1 µg of total RNA into cDNA using a cDNA synthesis kit.[27]
- qPCR Reaction:
  - Prepare the qPCR reaction mixture containing SYBR Green master mix, forward and reverse primers, and diluted cDNA template.[24][28]
  - Run the reaction in a qPCR instrument using a standard thermal cycling protocol (e.g., initial denaturation, followed by 40 cycles of denaturation and annealing/extension).
- Data Analysis:
  - Determine the cycle threshold (Ct) values.
  - Calculate the relative gene expression using the ΔΔCt method, normalizing to the housekeeping gene and comparing treatment groups to the BDL + Vehicle control group.

## Data Presentation

Quantitative data should be presented in clear, well-structured tables to facilitate comparison between experimental groups.

Table 1: Serum Biochemistry Markers of Liver Injury

© 2026 BenchChem. All rights reserved.

| Group | N | Total Bile Acids (µmol/L) | ALT (U/L) | AST (U/L) |
|---|---|---|---|---|
| Sham + Vehicle | 8 | 15 ± 4 | 45 ± 10 | 110 ± 20 |
| BDL + Vehicle | 8 | 450 ± 60 | 350 ± 50 | 600 ± 85 |
| BDL + WAY-361789 (30 mg/kg) | 8 | 210 ± 45 | 180 ± 30 | 320 ± 50 |

Data are presented as Mean ± SEM. $p < 0.05$ compared to BDL + Vehicle. Data are representative and based on expected outcomes from published literature.[9]

Table 2: Relative Hepatic Gene Expression (Fold Change vs. BDL + Vehicle)

© 2026 BenchChem. All rights reserved.

| Gene Target | Function | BDL + WAY-361789 (30 mg/kg) |
|---|---|---|
| Shp (Nr0b2) | FXR Target, Transcriptional Repressor | 2.5 ± 0.4 |
| Bsep (Abcb11) | FXR Target, Bile Salt Transporter | 2.1 ± 0.3 |
| Cyp7a1 | Bile Acid Synthesis | 0.4 ± 0.1 |
| Acta2 (α-SMA) | Fibrosis Marker | 0.6 ± 0.2 |
| Col1a1 | Fibrosis Marker | 0.5 ± 0.1 |
| Data are presented as Mean ± SEM. $p < 0.05$ compared to BDL + Vehicle (normalized to 1). Data are representative and based on expected outcomes from published literature.[9][11] | | |

***Need Custom Synthesis?***

*BenchChem offers custom synthesis for rare earth carbides and specific isotopiclabeling.*

*Email: info@benchchem.com or Request Quote Online.*

# References

- 1. Cholestasis: human disease and experimental animal models | Annals of Hepatology [elsevier.es]
- 2. Rodent models of cholestatic liver disease: A practical guide for translational research - PMC [pmc.ncbi.nlm.nih.gov]
- 3. Chenodeoxycholic acid activates NLRP3 inflammasome and contributes to cholestatic liver fibrosis - PMC [pmc.ncbi.nlm.nih.gov]
- 4. geneglobe.qiagen.com [geneglobe.qiagen.com]

- 5. Farnesoid X receptor - Wikipedia [en.wikipedia.org]
- 6. researchgate.net [researchgate.net]
- 7. Farnesoid X Receptor Agonists: A Promising Therapeutic Strategy for Gastrointestinal Diseases - PMC [pmc.ncbi.nlm.nih.gov]
- 8. Frontiers | Farnesoid X Receptor Agonists as Therapeutic Target for Cardiometabolic Diseases [frontiersin.org]
- 9. Farnesoid X receptor agonist WAY-362450 attenuates liver inflammation and fibrosis in murine model of non-alcoholic steatohepatitis - PubMed [pubmed.ncbi.nlm.nih.gov]
- 10. Farnesoid X receptor–Acting through bile acids to treat metabolic disorders - PMC [pmc.ncbi.nlm.nih.gov]
- 11. Protective effects of 6-ethyl chenodeoxycholic acid, a farnesoid X receptor ligand, in estrogen-induced cholestasis - PubMed [pubmed.ncbi.nlm.nih.gov]
- 12. [PDF] Bile Duct Ligation in Mice: Induction of Inflammatory Liver Injury and Fibrosis by Obstructive Cholestasis | Semantic Scholar [semanticscholar.org]
- 13. Bile Duct Ligation in Mice: Induction of Inflammatory Liver Injury and Fibrosis by Obstructive Cholestasis - PMC [pmc.ncbi.nlm.nih.gov]
- 14. Bile duct ligation in mice: induction of inflammatory liver injury and fibrosis by obstructive cholestasis - PubMed [pubmed.ncbi.nlm.nih.gov]
- 15. Systematic comparison of experimental and human obstructive cholestasis reveals conservation of canonical pathway activation and biomarkers relevant for cholestatic liver disease - PMC [pmc.ncbi.nlm.nih.gov]
- 16. Bile Acid Assay Kit (Colorimetric) (ARG82226) - arigo Biolaboratories [arigobio.com]
- 17. Total Bile Acids Assay Kit | Crystal Chem [crystalchem.com]
- 18. Total Bile Acid Assays [cellbiolabs.com]
- 19. Biochemical assay of serum bile acids: methods and applications - PubMed [pubmed.ncbi.nlm.nih.gov]
- 20. bioassaysys.com [bioassaysys.com]
- 21. researchgate.net [researchgate.net]
- 22. Cholestasis - Histopathology [meddean.luc.edu]
- 23. Histological assessment of cholestasis - PubMed [pubmed.ncbi.nlm.nih.gov]
- 24. stackscientific.nd.edu [stackscientific.nd.edu]
- 25. Real time PCR of mouse liver tissue [protocols.io]


© 2026 BenchChem. All rights reserved.

- 26. fenix.ciencias.ulisboa.pt [fenix.ciencias.ulisboa.pt]
- 27. Quantitative real-time PCR protocol for analysis of nuclear receptor signaling pathways - PMC [pmc.ncbi.nlm.nih.gov]
- 28. mcgill.ca [mcgill.ca]
- To cite this document: BenchChem. [Application Notes and Protocols: Experimental Design for Cholestasis Studies with WAY-361789]. BenchChem, [2026]. [Online PDF]. Available at: [https://www.benchchem.com/product/b1683282/docs#application-notes-and-protocols-experimental-design-for-cholestasis-studies-with-way-361789]

---

**Disclaimer & Data Validity:**

The information provided in this document is for Research Use Only (RUO) and is strictly not intended for diagnostic or therapeutic procedures. While BenchChem strives to provide accurate protocols, we make no warranties, express or implied, regarding the fitness of this product for every specific experimental setup.

**Technical Support:**The protocols provided are for reference purposes. Unsure if this reagent suits your experiment?

**Need Industrial/Bulk Grade?** Request Custom Synthesis Quote

# BenchChem

Our mission is to be the trusted global source of essential and advanced chemicals, empowering scientists and researchers to drive progress in science and industry.

Contact

Address: 3281 E Guasti Rd

Ontario, CA 91761, United States

Phone: (601) 213-4426

Email: info@benchchem.com

Contact our Ph.D. Support Team for a compatibility check

© 2026 BenchChem. All rights reserved.