Application Notes and Protocols: Smapp1 Dose-Response Experiments in Jurkat Cells

Author: BenchChem Technical Support Team. **Date**: April 2026

Compound of Interest

Compound Name: *Smapp1*

Cat. No.: *B1682085*

Get Quote

For Researchers, Scientists, and Drug Development Professionals

Introduction

Smapp1 is a novel small molecule inhibitor being investigated for its potential therapeutic effects on T-cell acute lymphoblastic leukemia (T-ALL). The Jurkat cell line, an immortalized line of human T lymphocytes, serves as a critical in vitro model for studying T-cell signaling and leukemia.[1][2] These application notes provide detailed protocols to characterize the dose-dependent effects of **Smapp1** on Jurkat cell viability, apoptosis, and relevant signaling pathways. The following protocols and data are intended to guide researchers in assessing the efficacy and mechanism of action of **Smapp1**.

Principle

These protocols are designed to assess the dose-response relationship of **Smapp1** in Jurkat cells. The core principle involves exposing Jurkat cell cultures to a range of **Smapp1** concentrations and subsequently measuring key cellular outcomes. These outcomes include cell viability, to determine the cytotoxic effects of the compound, and the induction of apoptosis, a primary mechanism of programmed cell death.[3][4] Furthermore, the modulation of key

© 2026 BenchChem. All rights reserved.

signaling pathways involved in T-cell activation and survival is investigated to elucidate the molecular mechanism of **Smapp1** action.[5]

Data Presentation

Table 1: Dose-Response of **Smapp1** on Jurkat Cell Viability

Smapp1 Concentration (µM)	Cell Viability (%) (Mean ± SD, n=3)	IC50 (µM)
0 (Vehicle Control)	100 ± 4.5	12.5
1	92 ± 5.1	
5	75 ± 6.2	
10	58 ± 4.8	
25	35 ± 3.9	
50	15 ± 2.7	

Table 2: Induction of Apoptosis by **Smapp1** in Jurkat Cells

Smapp1 Concentration (µM)	Early Apoptotic Cells (%) (Annexin V+/PI-)	Late Apoptotic/Necrotic Cells (%) (Annexin V+/PI+)	Total Apoptotic Cells (%)
0 (Vehicle Control)	5.2 ± 1.1	2.1 ± 0.5	7.3 ± 1.6
5	15.8 ± 2.3	4.5 ± 0.8	20.3 ± 3.1
10	28.4 ± 3.5	8.9 ± 1.2	37.3 ± 4.7
25	45.1 ± 4.1	15.6 ± 2.0	60.7 ± 6.1
50	58.9 ± 5.0	25.3 ± 2.8	84.2 ± 7.8

© 2026 BenchChem. All rights reserved.

Table 3: Effect of **Smapp1** on Key Signaling Protein Phosphorylation

Smapp1 Concentration (μM)	**p-Lck (Y394) Relative Density**	**p-ZAP-70 (Y319) Relative Density**	**p-ERK1/2 (T202/Y204) Relative Density**
0 (Vehicle Control)	1.00	1.00	1.00
5	0.78	0.85	0.92
10	0.52	0.61	0.75
25	0.25	0.33	0.48
50	0.11	0.15	0.22

Experimental Protocols

Jurkat Cell Culture

A standardized protocol for maintaining Jurkat cells is crucial for reproducible results.

- Cell Line: Jurkat, Clone E6-1.
- Medium: RPMI-1640 supplemented with 10% fetal bovine serum (FBS), 2 mM L-glutamine, 100 U/mL penicillin, and 100 µg/mL streptomycin.
- Culture Conditions: Maintain cells at 37°C in a humidified atmosphere with 5% CO2.
- Cell Density: Keep the cell density between 1 x 10^5 and 1 x 10^6 cells/mL.
- Viability Check: Before each experiment, assess cell viability using Trypan Blue exclusion; viability should be greater than 95%.

Smapp1 Stock Solution Preparation

- Prepare a 10 mM stock solution of **Smapp1** in sterile DMSO.
- Store the stock solution in aliquots at -20°C to avoid repeated freeze-thaw cycles.

© 2026 BenchChem. All rights reserved.

- For experiments, dilute the stock solution in the complete culture medium to achieve the desired final concentrations. Ensure the final DMSO concentration in the culture does not exceed 0.5% to avoid solvent-induced cytotoxicity.

Cell Viability Assay (MTT Assay)

This assay measures the metabolic activity of cells as an indicator of cell viability.

- Cell Seeding: Seed Jurkat cells in a 96-well plate at a density of 1 x 10^5 cells/well in 100 µL of complete culture medium.
- Treatment: Add 100 µL of medium containing serial dilutions of **Smapp1** (to final concentrations of 1, 5, 10, 25, and 50 µM) or vehicle control (DMSO) to the wells.
- Incubation: Incubate the plate for 48 hours at 37°C in a 5% CO2 incubator.
- MTT Addition: Add 20 µL of 5 mg/mL MTT (3-(4,5-dimethylthiazol-2-yl)-2,5-diphenyltetrazolium bromide) solution to each well and incubate for 4 hours.
- Solubilization: Add 100 µL of solubilization buffer (e.g., 10% SDS in 0.01 M HCl) to each well and incubate overnight to dissolve the formazan crystals.
- Data Acquisition: Measure the absorbance at 570 nm using a microplate reader.
- Data Analysis: Calculate the percentage of cell viability relative to the vehicle-treated control and determine the IC50 value.

Apoptosis Assay (Annexin V/Propidium Iodide Staining)

This flow cytometry-based assay distinguishes between live, early apoptotic, late apoptotic, and necrotic cells.

- Cell Seeding and Treatment: Seed Jurkat cells at a density of 1 x 10^6 cells/mL in a 24-well plate and treat with various concentrations of **Smapp1** or vehicle control for 24 hours.
- Cell Harvesting: Harvest the cells by centrifugation.

© 2026 BenchChem. All rights reserved.

- Staining: Wash the cells with cold PBS and resuspend them in 1X Annexin V binding buffer. Add FITC-conjugated Annexin V and Propidium Iodide (PI) to the cell suspension and incubate for 15 minutes at room temperature in the dark.
- Flow Cytometry: Analyze the stained cells by flow cytometry.
- Data Analysis: Quantify the percentage of cells in each quadrant (live: Annexin V-/PI-, early apoptotic: Annexin V+/PI-, late apoptotic/necrotic: Annexin V+/PI+).

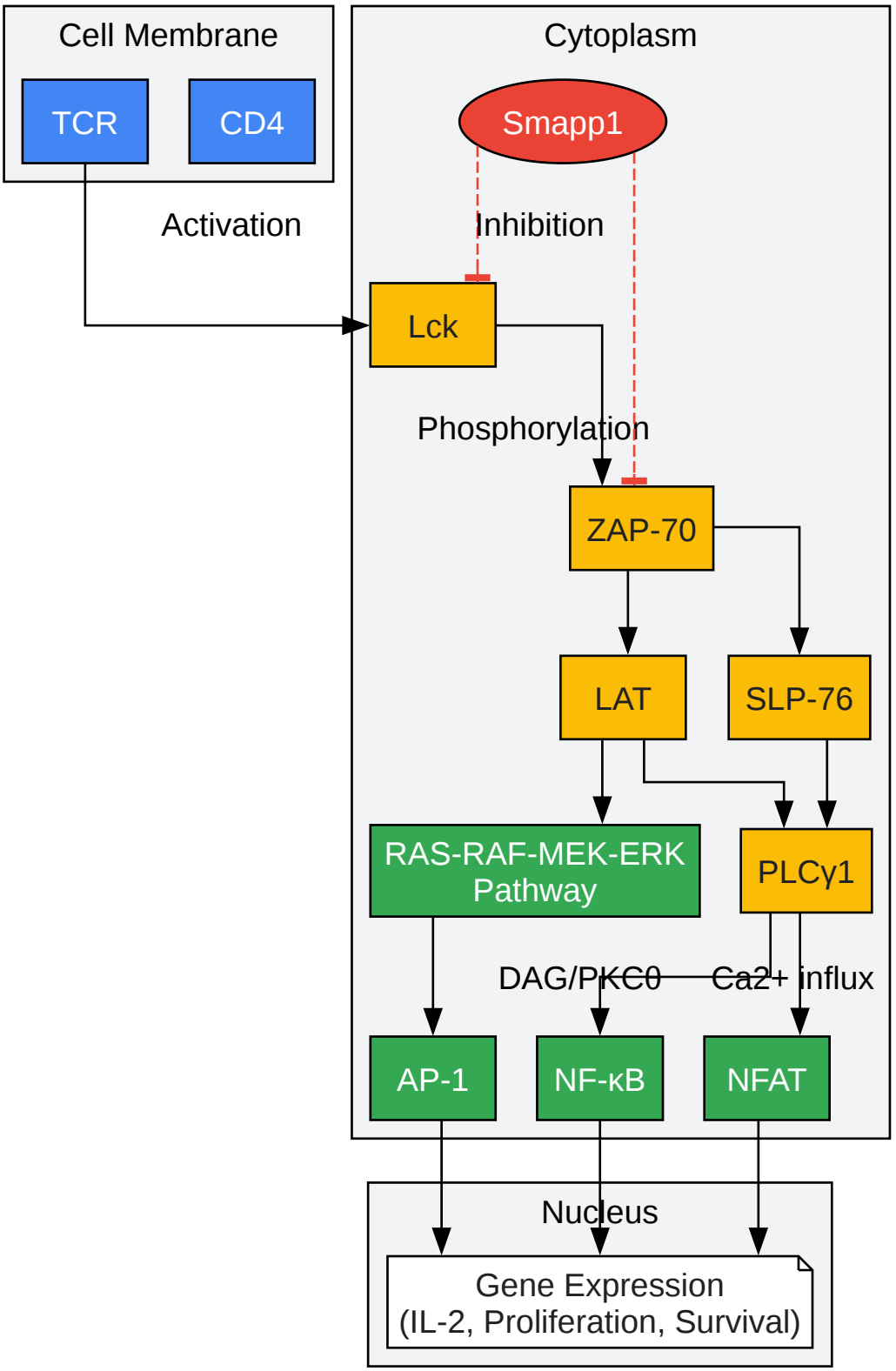
Western Blotting for Signaling Pathway Analysis

This technique is used to detect and quantify the levels of specific proteins involved in signaling cascades.

- Cell Treatment and Lysis: Treat Jurkat cells with **Smapp1** as described above for the desired time points. After treatment, wash the cells with cold PBS and lyse them in RIPA buffer containing protease and phosphatase inhibitors.
- Protein Quantification: Determine the protein concentration of the lysates using a BCA protein assay kit.
- SDS-PAGE and Transfer: Separate equal amounts of protein on an SDS-polyacrylamide gel and transfer them to a PVDF membrane.
- Immunoblotting: Block the membrane with 5% non-fat milk or BSA in TBST and then incubate with primary antibodies against total and phosphorylated forms of target proteins (e.g., Lck, ZAP-70, ERK1/2). Follow this with incubation with HRP-conjugated secondary antibodies.
- Detection: Visualize the protein bands using an enhanced chemiluminescence (ECL) detection system.
- Data Analysis: Quantify the band intensities using densitometry software and normalize the levels of phosphorylated proteins to their respective total protein levels.

Visualizations

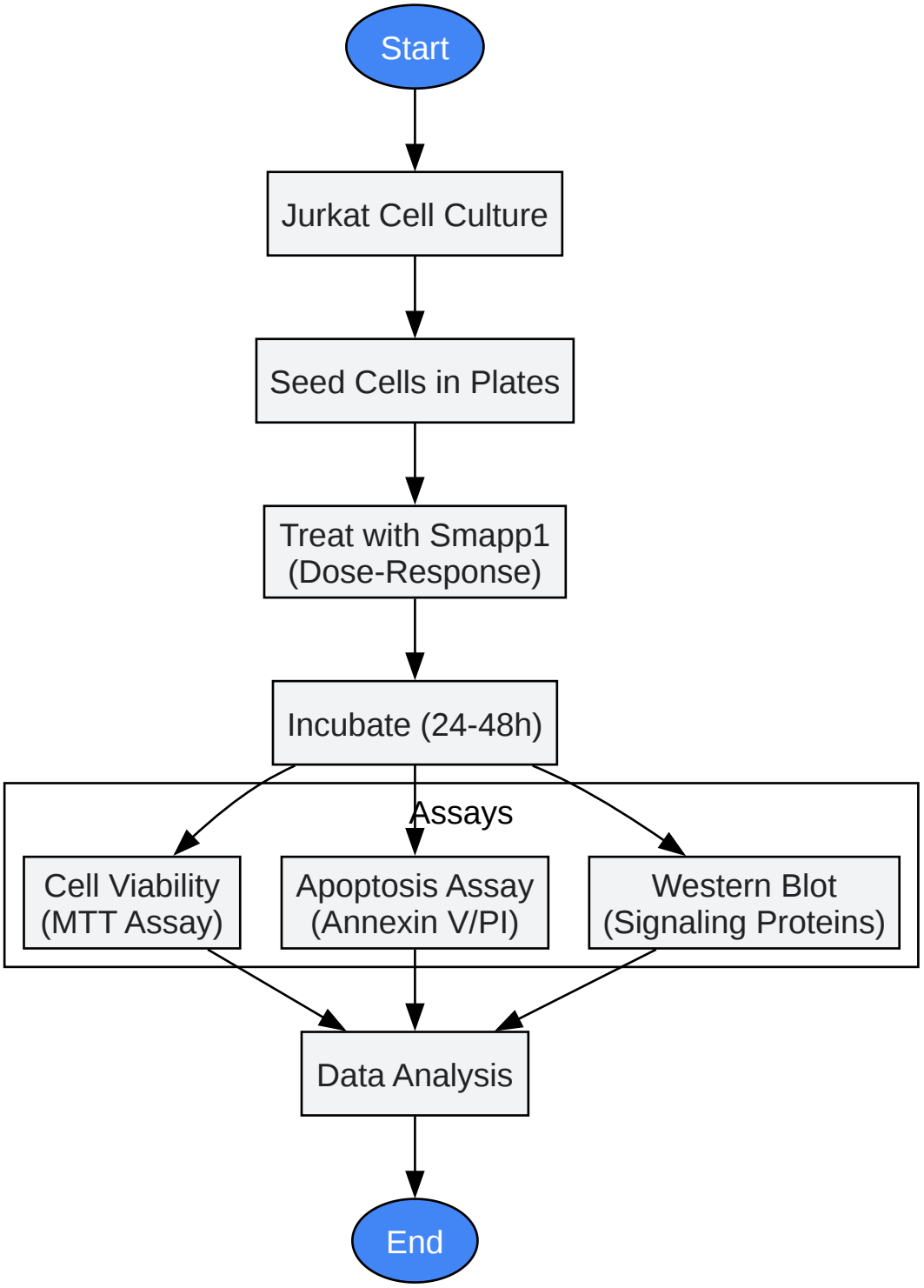
© 2026 BenchChem. All rights reserved.



Click to download full resolution via product page

Caption: Proposed signaling pathway of **Smapp1** in Jurkat cells.

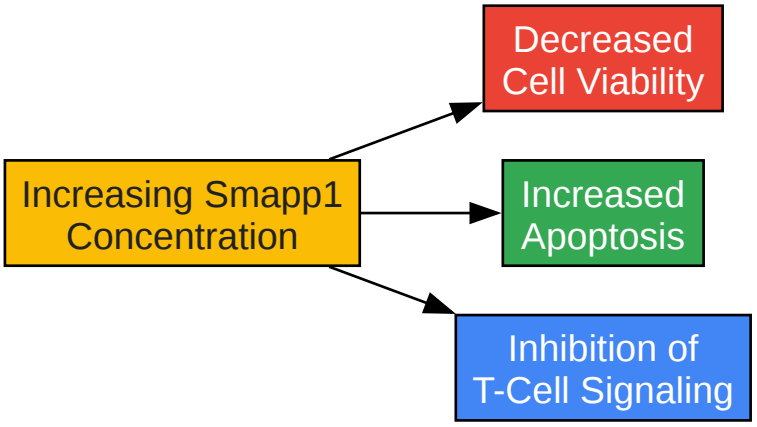
© 2026 BenchChem. All rights reserved.



Click to download full resolution via product page

Caption: Workflow for **Smapp1** dose-response experiments.

© 2026 BenchChem. All rights reserved.



Click to download full resolution via product page

Caption: Logical relationship of **Smapp1** dose-response.

Need Custom Synthesis?

BenchChem offers custom synthesis for rare earth carbides and specific isotopiclabeling.

Email: info@benchchem.com or Request Quote Online.

References

- 1. 404 Not Found | Ubigene [ubigene.us]
- 2. T cell activation and effector function in the human Jurkat T cell model - PubMed [pubmed.ncbi.nlm.nih.gov]
- 3. Flow cytometry apoptosis assay in Jurkat cells | Domainex [domainex.co.uk]
- 4. Apoptosis induced in Jurkat cells by several agents is preceded by intracellular acidification - PMC [pmc.ncbi.nlm.nih.gov]
- 5. Identification of Deregulated Signaling Pathways in Jurkat Cells in Response to a Novel Acylspermidine Analogue-N4-Erucoyl Spermidine - PMC [pmc.ncbi.nlm.nih.gov]
- To cite this document: BenchChem. [Application Notes and Protocols: Smapp1 Dose-Response Experiments in Jurkat Cells]. BenchChem, [2026]. [Online PDF]. Available at: [https://www.benchchem.com/product/b1682085/docs#application-notes-and-protocols-smapp1-dose-response-experiments-in-jurkat-cells]

© 2026 BenchChem. All rights reserved.

Disclaimer & Data Validity:

The information provided in this document is for Research Use Only (RUO) and is strictly not intended for diagnostic or therapeutic procedures. While BenchChem strives to provide accurate protocols, we make no warranties, express or implied, regarding the fitness of this product for every specific experimental setup.

Technical Support: The protocols provided are for reference purposes. Unsure if this reagent suits your experiment?

Need Industrial/Bulk Grade? Request Custom Synthesis Quote

BenchChem

Our mission is to be the trusted global source of essential and advanced chemicals, empowering scientists and researchers to drive progress in science and industry.

Contact

Address: 3281 E Guasti Rd

Ontario, CA 91761, United States

Phone: (601) 213-4426

Email: info@benchchem.com

Contact our Ph.D. Support Team for a compatibility check

© 2026 BenchChem. All rights reserved.