Technical Support Center: SJG-136 Off-Target Effects in Normal Cells

Author: BenchChem Technical Support Team. **Date**: April 2026

Compound of Interest	
Compound Name:	*Sjg 136*
CAS No.:	*232931-57-6*
Cat. No.:	*B1681649*

Get Quote

This technical support center provides researchers, scientists, and drug development professionals with troubleshooting guides and frequently asked questions regarding the off-target effects of SJG-136 in normal, non-tumorigenic cells.

Frequently Asked Questions (FAQs)

Q1: What is the primary mechanism of action of SJG-136 and how does it lead to off-target effects?

SJG-136 is a pyrrolobenzodiazepine (PBD) dimer that acts as a sequence-selective DNA minor groove cross-linking agent.[1] Its primary on-target effect is the formation of covalent interstrand and intrastrand DNA cross-links, preferentially at purine-GATC-pyrimidine sequences, leading to potent cytotoxicity in tumor cells.[1][2] However, because this mechanism is not entirely specific to cancer cells, SJG-136 can also induce DNA damage in normal cells, leading to off-target effects. The cytotoxic DNA interstrand cross-links form rapidly and are persistent.[1]

Q2: What are the most common off-target toxicities observed with SJG-136 in clinical trials?

© 2026 BenchChem. All rights reserved.

Phase I clinical trials of SJG-136 in patients with advanced solid tumors have reported several dose-limiting toxicities, which are manifestations of off-target effects in normal tissues. The most significant of these include:

- Vascular Leak Syndrome (VLS): Characterized by hypoalbuminemia, edema, pleural effusions, and ascites.[3][4] The precise mechanism of VLS is not fully elucidated but is a major dose-limiting toxicity.
- Hepatotoxicity: Observed as elevated liver function tests, which can be delayed in onset.[3][4]
- Fatigue: A common and sometimes severe adverse event.[3][5]
- Dyspnea (Shortness of breath).[5]

Notably, significant myelosuppression (suppression of bone marrow activity) has not been a consistent dose-limiting toxicity.[5]

Q3: How does the cytotoxicity of SJG-136 in normal cells compare to cancer cells?

Direct comparative studies across a wide range of normal human cell lines are limited. However, available data suggests that SJG-136 is highly potent against both normal and cancerous cells, though some cancer cell lines exhibit greater sensitivity. For instance, in a study using a normal murine fibroblast cell line (3T3), the IC50 value was 6.3 nM.[6] In contrast, many cancer cell lines show sensitivity in the sub-nanomolar to low nanomolar range.[7][8]

It is important to note that the sensitivity of both normal and cancer cells can be influenced by factors such as the expression of drug efflux pumps like P-glycoprotein (MDR1).[6]

Q4: What cellular signaling pathways are activated by SJG-136 in normal cells?

The formation of DNA cross-links by SJG-136 in normal cells triggers the DNA Damage Response (DDR) pathway. A key event in this pathway is the phosphorylation of the histone variant H2AX to form γ-H2AX, which serves as a sensitive biomarker of DNA double-strand breaks.[9] Studies have shown that SJG-136 induces γ-H2AX foci in normal human fibroblasts (AGO1522B) and peripheral blood lymphocytes (PBLs) at concentrations as low as 10 pM.[10][11] The peak of this γ-H2AX response in vitro occurs approximately 24 hours after the peak of

© 2026 BenchChem. All rights reserved.

DNA cross-linking.[11] This indicates the activation of DNA repair processes in normal cells, which, if overwhelmed, can lead to apoptosis.

Troubleshooting Guides

Issue: High variability in cytotoxicity assays with normal cell lines.

- Possible Cause 1: Cell line health and passage number. Normal cell lines can have a limited lifespan and their characteristics can change with high passage numbers.
    - Troubleshooting Tip: Always use low-passage normal cells for cytotoxicity experiments. Ensure cells are healthy and growing exponentially before treatment.
- Possible Cause 2: Inconsistent drug exposure time. SJG-136's cytotoxicity is time-dependent.
    - Troubleshooting Tip: Strictly adhere to the planned drug incubation times across all experiments.
- Possible Cause 3: Serum protein binding. Components in fetal bovine serum (FBS) can bind to SJG-136, reducing its effective concentration.
    - Troubleshooting Tip: Maintain a consistent percentage of FBS in your culture medium for all assays. If variability persists, consider using serum-free medium for the duration of the drug treatment, if the cells can tolerate it.

Issue: Difficulty in detecting DNA cross-links in normal cells at low SJG-136 concentrations.

- Possible Cause: Assay sensitivity. The single-cell gel electrophoresis (comet) assay, while effective, may not be sensitive enough to detect the low levels of cross-links at very low, but still biologically relevant, concentrations of SJG-136.
    - Troubleshooting Tip: Consider using the more sensitive γ-H2AX foci formation assay. This assay can detect the cellular response to DNA damage at concentrations of SJG-136 that are more than 10-fold lower than the detection limit of the comet assay for cross-linking. [11]

© 2026 BenchChem. All rights reserved.

Quantitative Data Summary

The following tables summarize the available quantitative data on the cytotoxicity and DNA damage induction by SJG-136 in normal and cancer cells.

Table 1: In Vitro Cytotoxicity of SJG-136

Cell Line	Cell Type	Species	IC50 (nM)	Assay	Reference
3T3	Normal Fibroblast	Murine	6.3	SRB	[6]
3T3 (MDR1-expressing)	Normal Fibroblast	Murine	208	SRB	[6]
HCT-116	Colon Carcinoma	Human	0.1 - 0.3	SRB	[6]
HT-29	Colon Carcinoma	Human	0.1 - 0.3	SRB	[6]
SW620	Colon Carcinoma	Human	0.1 - 0.3	SRB	[6]
HCT-8	Colon Carcinoma	Human	2.3	SRB	[6]
HCT-15	Colon Carcinoma	Human	3.7	SRB	[6]
NCI-H522	Lung Carcinoma	Human	Subnanomolar	Not Specified	[5]
HL-60	Promyelocytic Leukemia	Human	Subnanomolar	Not Specified	[5]
Molt-4	T-cell Leukemia	Human	Subnanomolar	Not Specified	[5]

Table 2: DNA Damage Response in Normal Human Cells

© 2026 BenchChem. All rights reserved.

Cell Type	Assay	Endpoint	Effective Concentration	Key Finding	Reference
AGO1522B Fibroblasts	γ-H2AX Foci Formation	DNA Double-Strand Breaks	As low as 10 pM	Highly sensitive detection of DNA damage response.	[10]
Peripheral Blood Lymphocytes	γ-H2AX Foci Formation	DNA Double-Strand Breaks	Clinically relevant doses	Peak response at 24 hours post-treatment.	[10][11]
AGO1522B Fibroblasts	Comet Assay	DNA Interstrand Cross-links	>100 pM	Less sensitive than γ-H2AX assay.	[10][11]

Experimental Protocols

1. Sulforhodamine B (SRB) Cytotoxicity Assay

This protocol is adapted from standard methods for determining cell density based on the measurement of cellular protein content.

- Cell Seeding:
  - Plate cells in a 96-well plate at a density of 5,000-20,000 cells per well in 100 µL of complete culture medium.
  - Incubate for 24 hours at 37°C in a 5% CO2 incubator to allow for cell attachment.
- Drug Treatment:
  - Prepare serial dilutions of SJG-136 in culture medium.

© 2026 BenchChem. All rights reserved.

- Add 100 µL of the drug dilutions to the respective wells and incubate for the desired exposure time (e.g., 72 hours). Include untreated and vehicle controls.

- Cell Fixation:
  - After incubation, gently add 50 µL of cold 10% (w/v) trichloroacetic acid (TCA) to each well without removing the culture medium.
  - Incubate at 4°C for 1 hour.
- Staining:
  - Wash the plate five times with slow-running tap water and allow it to air dry completely.
  - Add 100 µL of 0.4% (w/v) SRB in 1% acetic acid to each well.
  - Incubate at room temperature for 30 minutes.
- Washing:
  - Quickly wash the plate four times with 1% (v/v) acetic acid to remove unbound dye.
  - Allow the plate to air dry completely.
- Solubilization and Measurement:
  - Add 200 µL of 10 mM Tris base solution (pH 10.5) to each well.
  - Shake the plate for 10 minutes to solubilize the protein-bound dye.
  - Read the absorbance at 510 nm using a microplate reader.
  - Calculate the percentage of cell survival relative to untreated controls.

2. γ-H2AX Foci Formation Assay for DNA Damage

This immunofluorescence-based assay detects the phosphorylation of histone H2AX, a marker for DNA double-strand breaks.

© 2026 BenchChem. All rights reserved.

- Cell Culture and Treatment:
  - Grow cells on glass coverslips in a multi-well plate.
  - Treat cells with the desired concentrations of SJG-136 for the specified duration.
- Fixation and Permeabilization:
  - After treatment, wash the cells with PBS.
  - Fix the cells with 4% paraformaldehyde in PBS for 15 minutes at room temperature.
  - Permeabilize the cells with 0.25% Triton X-100 in PBS for 10 minutes.
- Immunostaining:
  - Block non-specific antibody binding with 5% BSA in PBS for 1 hour.
  - Incubate with a primary antibody against γ-H2AX (e.g., anti-phospho-histone H2AX Ser139) overnight at 4°C.
  - Wash three times with PBS.
  - Incubate with a fluorescently labeled secondary antibody (e.g., Alexa Fluor 488-conjugated) for 1 hour at room temperature in the dark.
- Counterstaining and Mounting:
  - Wash three times with PBS.
  - Counterstain the nuclei with DAPI (4',6-diamidino-2-phenylindole).
  - Mount the coverslips onto microscope slides using an anti-fade mounting medium.
- Imaging and Analysis:
  - Visualize the cells using a fluorescence microscope.
  - Quantify the number of γ-H2AX foci per nucleus using image analysis software.

© 2026 BenchChem. All rights reserved.

Visualizations

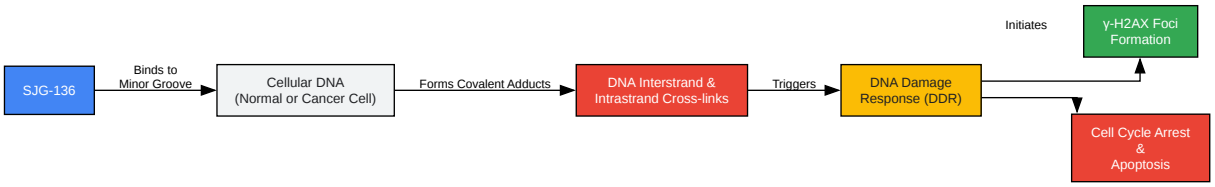

Click to download full resolution via product page

Caption: Mechanism of SJG-136 induced cytotoxicity.

© 2026 BenchChem. All rights reserved.

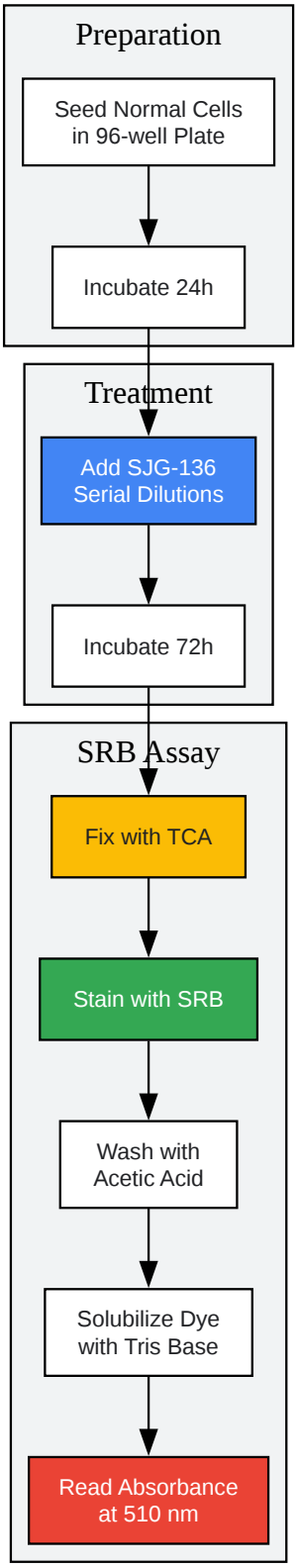

Click to download full resolution via product page

Caption: Workflow for assessing SJG-136 cytotoxicity.

© 2026 BenchChem. All rights reserved.

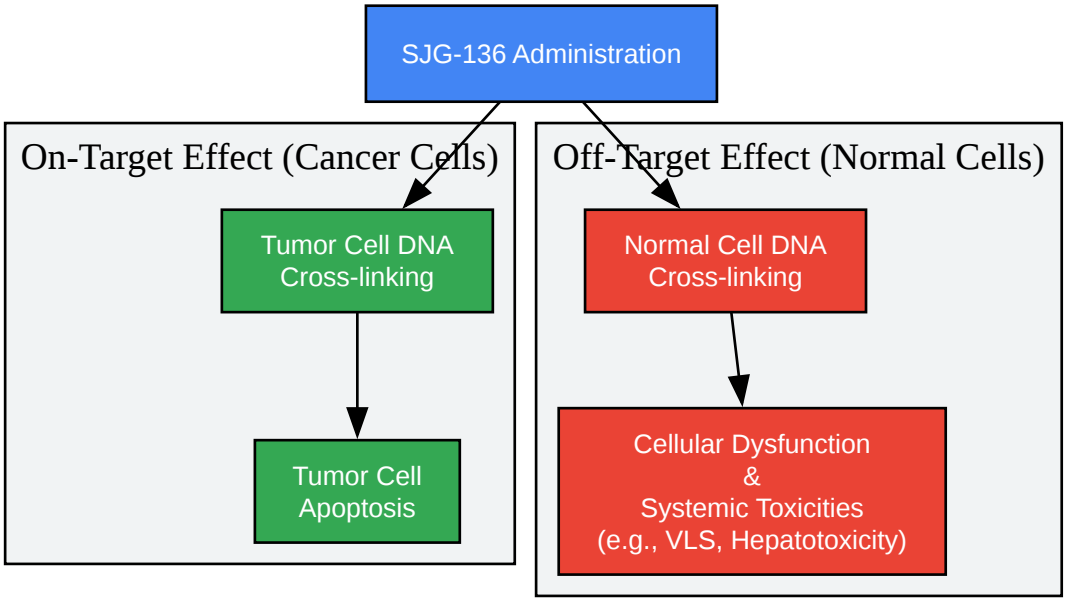

Click to download full resolution via product page

Caption: On-target vs. Off-target effects of SJG-136.

Need Custom Synthesis?

BenchChem offers custom synthesis for rare earth carbides and specific isotopiclabeling.

Email: info@benchchem.com or Request Quote Online.

References

- 1. Monitoring DNA Damage and Repair in Peripheral Blood Mononuclear Cells of Lung Cancer Radiotherapy Patients - PMC [pmc.ncbi.nlm.nih.gov]
- 2. The pyrrolobenzodiazepine dimer SJG-136 forms sequence-dependent intrastrand DNA cross-links and monoalkylated adducts in addition to interstrand cross-links - PubMed [pubmed.ncbi.nlm.nih.gov]
- 3. aacrjournals.org [aacrjournals.org]
- 4. Phase I study of sequence-selective minor groove DNA binding agent SJG-136 in patients with advanced solid tumors - PubMed [pubmed.ncbi.nlm.nih.gov]
- 5. Phase I, Pharmacokinetic and Pharmacodynamic Study of SJG-136, a Novel DNA Sequence Selective Minor Groove Cross-Linking Agent, in advanced solid tumors - PMC

© 2026 BenchChem. All rights reserved.

[pmc.ncbi.nlm.nih.gov]

- 6. Influence of P-glycoprotein expression on in vitro cytotoxicity and in vivo antitumour activity of the novel pyrrolobenzodiazepine dimer SJG-136 - PubMed [pubmed.ncbi.nlm.nih.gov]
- 7. SJG-136 (NSC 694501), a novel rationally designed DNA minor groove interstrand cross-linking agent with potent and broad spectrum antitumor activity: part 1: cellular pharmacology, in vitro and initial in vivo antitumor activity - PubMed [pubmed.ncbi.nlm.nih.gov]
- 8. SJG-136 (NSC 694501), a novel rationally designed DNA minor groove interstrand cross-linking agent with potent and broad spectrum antitumor activity: part 2: efficacy evaluations - PubMed [pubmed.ncbi.nlm.nih.gov]
- 9. USE OF THE γ-H2AX ASSAY TO MONITOR DNA DAMAGE AND REPAIR IN TRANSLATIONAL CANCER RESEARCH - PMC [pmc.ncbi.nlm.nih.gov]
- 10. γ-H2AX foci formation as a pharmacodynamic marker of DNA damage produced by DNA cross-linking agents: results from two Phase I clinical trials of SJG-136 (SG2000) - PMC [pmc.ncbi.nlm.nih.gov]
- 11. γ-H2AX foci formation as a pharmacodynamic marker of DNA damage produced by DNA cross-linking agents: results from 2 phase I clinical trials of SJG-136 (SG2000) - PubMed [pubmed.ncbi.nlm.nih.gov]
- To cite this document: BenchChem. [Technical Support Center: SJG-136 Off-Target Effects in Normal Cells]. BenchChem, [2026]. [Online PDF]. Available at: [https://www.benchchem.com/product/b1681649/docs#technical-support-center-sjg-136-off-target-effects-in-normal-cells]

Disclaimer & Data Validity:

The information provided in this document is for Research Use Only (RUO) and is strictly not intended for diagnostic or therapeutic procedures. While BenchChem strives to provide accurate protocols, we make no warranties, express or implied, regarding the fitness of this product for every specific experimental setup.

Technical Support: The protocols provided are for reference purposes. Unsure if this reagent suits your experiment?

Need Industrial/Bulk Grade? Request Custom Synthesis Quote

© 2026 BenchChem. All rights reserved.

BenchChem

Our mission is to be the trusted global source of essential and advanced chemicals, empowering scientists and researchers to drive progress in science and industry.

Contact

Address: 3281 E Guasti Rd

Ontario, CA 91761, United States

Phone: (601) 213-4426

Email: info@benchchem.com

Contact our Ph.D. Support Team for a compatibility check

© 2026 BenchChem. All rights reserved.