SM19712 off-target effects in experiments

Author: BenchChem Technical Support Team. **Date**: April 2026

Compound of Interest

Compound Name: *SM19712 free acid*

Cat. No.: *B1681017*

Get Quote

Technical Support Center: SM19712

Disclaimer: Publicly available information on the specific off-target effects of SM19712 is limited. This guide focuses on troubleshooting and experimental considerations based on its primary mechanism of action as a potent and selective endothelin-converting enzyme (ECE) inhibitor.

Frequently Asked Questions (FAQs)

Q1: What is the primary mechanism of action for SM19712?

A1: SM19712 is a potent, nonpeptidic inhibitor of endothelin-converting enzyme (ECE).[1][2] ECE is a key enzyme in the endothelin pathway, responsible for cleaving the inactive precursor, big endothelin-1 (big ET-1), to produce the biologically active, potent vasoconstrictor, endothelin-1 (ET-1).[1][3] By inhibiting ECE, SM19712 reduces the levels of mature ET-1.[2]

Q2: I'm not seeing the expected decrease in ET-1 levels in my experiment. What could be the cause?

A2: Several factors could contribute to this:

© 2026 BenchChem. All rights reserved.

- Insufficient concentration of SM19712: Ensure the concentration used is appropriate for your experimental system.
- Cell type or tissue specificity: ECE activity and the efficacy of inhibitors can vary between different cell types and tissues.
- Alternative ET-1 processing pathways: In some systems, enzymes other than ECE may contribute to ET-1 production.
- Reagent stability: Confirm the stability and proper storage of your SM19712 compound.
- Assay sensitivity: The method used to measure ET-1 may not be sensitive enough to detect the changes in your system.

Q3: My cells are showing unexpected changes in viability/proliferation after treatment with SM19712. Why might this be happening?

A3: While specific off-target effects of SM19712 are not well-documented, unexpected changes in cell behavior could be due to:

- Complex role of the endothelin system: ET-1 itself has diverse biological activities, including roles in cell proliferation and tissue remodeling.[3][4] Inhibiting its production could have unforeseen consequences depending on the cell type and context.
- Interplay with other signaling pathways: The endothelin system is interconnected with other pathways, such as the nitric oxide (NO) and renin-angiotensin systems.[4][5] Perturbing the endothelin pathway may lead to compensatory changes in these related systems, causing unexpected cellular responses.
- Non-specific effects at high concentrations: At very high concentrations, any compound can exhibit non-specific effects. It is crucial to perform a dose-response curve to determine the optimal concentration.

Q4: Are there known off-target effects for SM19712?

A4: Based on available literature, specific off-target kinase profiles or broad off-target screening data for SM19712 are not readily available. The primary characterization of SM19712 is as a

© 2026 BenchChem. All rights reserved.

potent and selective ECE inhibitor.[1][2] Researchers should be aware that, like any small molecule, off-target interactions are possible and should be considered, especially if observing unexpected phenotypes.

Troubleshooting Guides

Issue 1: Inconsistent or Non-reproducible Inhibition of ET-1 Production

Possible Cause	Troubleshooting Step
SM19712 Degradation	Prepare fresh stock solutions of SM19712 for each experiment. Avoid repeated freeze-thaw cycles.
Cell Culture Variability	Ensure consistent cell passage number, confluency, and serum conditions, as these can affect ECE expression and activity.
Assay Interference	Run appropriate controls for your ET-1 measurement assay (e.g., ELISA), including a standard curve and vehicle-treated samples. Check for potential interference from components of your cell culture medium.
Sub-optimal Incubation Time	Perform a time-course experiment to determine the optimal duration of SM19712 treatment for observing a significant reduction in ET-1 levels.

Issue 2: Unexpected Vasoconstriction/Vasodilation in Ex Vivo Tissue Bath Experiments

© 2026 BenchChem. All rights reserved.

Possible Cause	Troubleshooting Step
Compensatory Mechanisms	The inhibition of ET-1 production may lead to upregulation of other vasoconstrictor pathways or downregulation of vasodilator pathways. Consider co-treatment with antagonists for other relevant receptors (e.g., angiotensin receptors).
ETB Receptor-mediated Effects	Endothelin B (ETB) receptors can mediate both vasodilation and vasoconstriction.[3] The net effect of inhibiting ET-1 production may depend on the relative expression and activity of ETA and ETB receptors in your tissue of interest.
Tissue Health	Ensure the viability and health of the ex vivo tissue preparation. Poor tissue health can lead to non-specific and unreliable responses.

Experimental Protocols

Protocol: In Vitro ECE Inhibition Assay

This protocol provides a general framework for assessing the inhibitory activity of SM19712 on ECE in a cell-based assay.

- Cell Culture: Culture a relevant cell line known to express ECE and secrete ET-1 (e.g., endothelial cells) in appropriate growth medium.
- Cell Plating: Seed the cells in a multi-well plate at a density that will result in a confluent monolayer on the day of the experiment.
- Compound Preparation: Prepare a stock solution of SM19712 in a suitable solvent (e.g., DMSO). Make serial dilutions to achieve the desired final concentrations.
- Treatment: When cells are confluent, replace the growth medium with a serum-free medium containing different concentrations of SM19712 or vehicle control.
- Incubation: Incubate the cells for a predetermined time (e.g., 24 hours) to allow for the inhibition of ECE and subsequent reduction in ET-1 secretion.

© 2026 BenchChem. All rights reserved.

- Sample Collection: Collect the conditioned medium from each well.
- ET-1 Measurement: Quantify the concentration of ET-1 in the conditioned medium using a commercially available ELISA kit, following the manufacturer's instructions.
- Data Analysis: Calculate the percentage of ET-1 inhibition for each concentration of SM19712 relative to the vehicle control. Determine the IC50 value if a dose-response curve was generated.

Visualizations

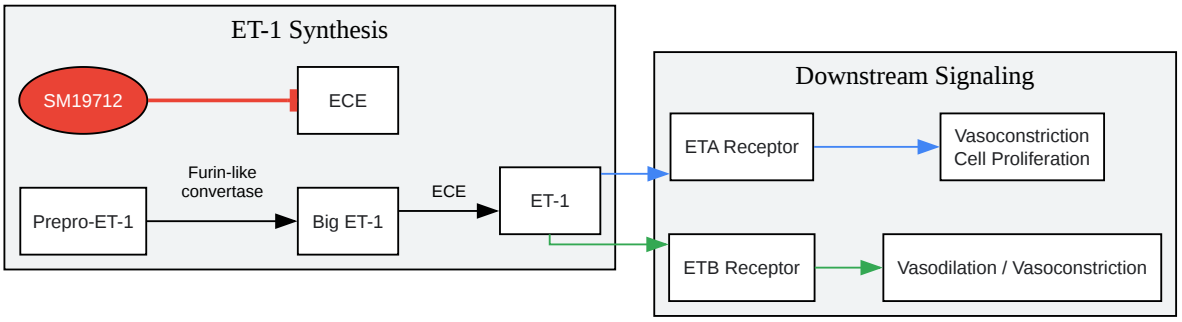

Click to download full resolution via product page

Caption: Endothelin-1 synthesis and signaling pathway, showing inhibition of ECE by SM19712.

© 2026 BenchChem. All rights reserved.

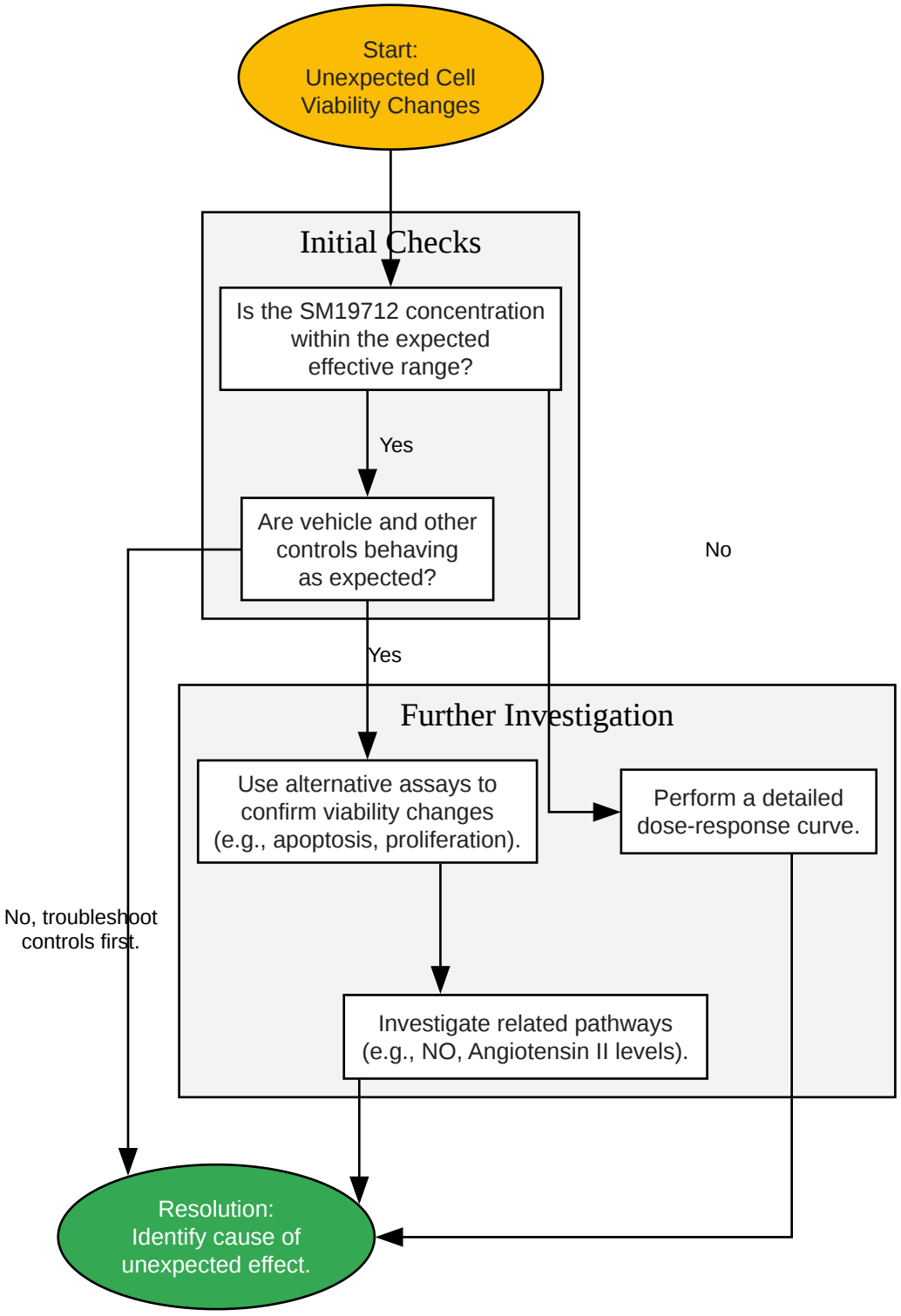

Click to download full resolution via product page

Caption: Troubleshooting workflow for unexpected cell viability changes with SM19712.

© 2026 BenchChem. All rights reserved.

Need Custom Synthesis?

BenchChem offers custom synthesis for rare earth carbides and specific isotopiclabeling.

Email: info@benchchem.com or Request Quote Online.

References

- 1. What ECE inhibitors are in clinical trials currently? [synapse.patsnap.com]
- 2. Protective effect of SM-19712, a novel and potent endothelin converting enzyme inhibitor, on ischemic acute renal failure in rats - PubMed [pubmed.ncbi.nlm.nih.gov]
- 3. What are ECE inhibitors and how do they work? [synapse.patsnap.com]
- 4. Endothelium-derived endothelin-1 - PMC [pmc.ncbi.nlm.nih.gov]
- 5. mdpi.com [mdpi.com]
- To cite this document: BenchChem. [SM19712 off-target effects in experiments]. BenchChem, [2026]. [Online PDF]. Available at: [https://www.benchchem.com/product/b1681017/docs#sm19712-off-target-effects-in-experiments]

Disclaimer & Data Validity:

The information provided in this document is for Research Use Only (RUO) and is strictly not intended for diagnostic or therapeutic procedures. While BenchChem strives to provide accurate protocols, we make no warranties, express or implied, regarding the fitness of this product for every specific experimental setup.

Technical Support: The protocols provided are for reference purposes. Unsure if this reagent suits your experiment?

Need Industrial/Bulk Grade? Request Custom Synthesis Quote

© 2026 BenchChem. All rights reserved.

BenchChem

Our mission is to be the trusted global source of essential and advanced chemicals, empowering scientists and researchers to drive progress in science and industry.

Contact

Address: 3281 E Guasti Rd

Ontario, CA 91761, United States

Phone: (601) 213-4426

Email: info@benchchem.com

Contact our Ph.D. Support Team for a compatibility check

© 2026 BenchChem. All rights reserved.