Initial Screening of Potential Trichomonacidal Agents: A Technical Guide

Author: BenchChem Technical Support Team. **Date**: April 2026

Compound of Interest

Compound Name:	*Trichomonacid*
CAS No.:	*7195-14-4*
Cat. No.:	*B1681383*

Get Quote

For Researchers, Scientists, and Drug Development Professionals

This technical guide provides a comprehensive overview of the essential methodologies and critical data evaluation techniques for the initial screening of potential **trichomonacid**al agents against Trichomonas vaginalis, the etiological agent of trichomoniasis. This document outlines detailed experimental protocols for in vitro susceptibility and cytotoxicity assays, presents quantitative data for a range of compounds, and visualizes key experimental workflows and signaling pathways pertinent to drug discovery.

Introduction

Trichomonas vaginalis is a flagellated protozoan parasite responsible for the most common non-viral sexually transmitted infection worldwide. Current treatment relies heavily on the 5-nitroimidazole class of drugs, primarily metronidazole and tinidazole. However, the emergence of drug-resistant strains necessitates the discovery and development of new **trichomonacid**al agents with novel mechanisms of action. The initial screening phase is a critical step in this process, involving the identification of compounds with potent activity against the parasite while exhibiting minimal toxicity to host cells.

© 2026 BenchChem. All rights reserved.

Experimental Protocols

Detailed methodologies for the primary assays in the initial screening cascade are provided below. These protocols are foundational for generating reliable and reproducible data.

In Vitro Susceptibility Testing of Trichomonas vaginalis

The determination of a compound's potency against T. vaginalis is typically assessed by measuring its Minimum Lethal Concentration (MLC) or the 50% inhibitory concentration (IC50).

2.1.1. Minimum Lethal Concentration (MLC) Assay

The MLC is the lowest concentration of a drug that results in the death of all trichomonads. A widely used method is the broth microdilution assay[1].

Protocol:

- Parasite Culture:T. vaginalis isolates are cultured in Diamond's Trypticase-Yeast Extract-Maltose (TYM) medium supplemented with heat-inactivated horse serum at 37°C[2].
- Compound Preparation: Test compounds are serially diluted in TYM medium in a 96-well microtiter plate. A drug-free control and a solvent control are included.
- Inoculation: Each well is inoculated with a standardized suspension of T. vaginalis trophozoites (e.g., 1 x 10^5 cells/mL).
- Incubation: The plates are incubated anaerobically at 37°C for 48 hours.
- Endpoint Determination: After incubation, each well is examined microscopically for motile trichomonads. The MLC is the lowest drug concentration in which no motile parasites are observed[1].

2.1.2. 50% Inhibitory Concentration (IC50) Assay

The IC50 value represents the concentration of a compound that inhibits 50% of the parasite's growth or viability. This can be determined using various methods, including fluorescence-based assays.

© 2026 BenchChem. All rights reserved.

Protocol (Fluorescence-Based Assay):

- Parasite Culture and Inoculation: Similar to the MLC assay, T. vaginalis is cultured and inoculated into 96-well plates containing serial dilutions of the test compound.
- Incubation: Plates are incubated under appropriate conditions for a set period (e.g., 24 or 48 hours).
- Viability Staining: A viability dye, such as resazurin or SYBR Green I, is added to each well. Live cells will metabolize the dye, resulting in a measurable change in fluorescence or color.
- Data Acquisition: The fluorescence or absorbance is read using a microplate reader.
- IC50 Calculation: The IC50 value is determined by plotting the percentage of inhibition against the log of the compound concentration and fitting the data to a dose-response curve.

Cytotoxicity Assays

Assessing the toxicity of potential **trichomonacid**al agents against mammalian cells is crucial to determine their selectivity. The MTT assay is a commonly used colorimetric method for this purpose[3][4].

Protocol (MTT Assay on Mammalian Cell Lines, e.g., HeLa, Vero, HepG2):

- Cell Culture: Mammalian cells (e.g., HeLa, Vero, or HepG2) are cultured in appropriate media and conditions (e.g., DMEM with 10% FBS at 37°C in a 5% CO2 incubator)[4][5][6].
- Cell Seeding: Cells are seeded into 96-well plates at a predetermined density and allowed to adhere overnight[7].
- Compound Treatment: The culture medium is replaced with fresh medium containing serial dilutions of the test compounds. A vehicle control (e.g., DMSO) is included[7].
- Incubation: Plates are incubated for a specified period (e.g., 24, 48, or 72 hours)[7].
- MTT Addition: The medium is replaced with a fresh medium containing 3-(4,5-dimethylthiazol-2-yl)-2,5-diphenyltetrazolium bromide (MTT) solution (e.g., 0.5 mg/mL) and

© 2026 BenchChem. All rights reserved.

incubated for 2-4 hours. Viable cells with active mitochondria will reduce the yellow MTT to purple formazan crystals[3][4].

- Solubilization: The formazan crystals are dissolved by adding a solubilization solution (e.g., DMSO or acidified isopropanol)[3][7].
- Absorbance Measurement: The absorbance of the solubilized formazan is measured using a microplate reader at a wavelength of approximately 570 nm[4].
- CC50 Calculation: The 50% cytotoxic concentration (CC50) is calculated by plotting the percentage of cell viability against the log of the compound concentration.

Data Presentation: In Vitro Efficacy and Cytotoxicity of Potential Trichomonacidal Agents

The following tables summarize the in vitro activity (IC50 and MLC) and cytotoxicity (CC50) of various compounds against T. vaginalis and mammalian cell lines, respectively. The Selectivity Index (SI), calculated as the ratio of CC50 to IC50, is a critical parameter for prioritizing compounds for further development. A higher SI value indicates greater selectivity for the parasite over host cells.

Table 1: In Vitro Activity of Synthetic Compounds against Trichomonas vaginalis

© 2026 BenchChem. All rights reserved.

Compound Class	Compound	T. vaginalis Strain	IC50 (μM)	MLC (μg/mL)	Reference
5-Nitroimidazoles	Metronidazole	Sensitive	0.93	-	
	Metronidazole	Resistant	>50	-	[8]
	Tinidazole	Sensitive	-	<6.3	[8]
	Secnidazole	Sensitive	-	≤12.5	[2][9]
Benzimidazoles	Albendazole	-	-	-	[10]
Dicationic Compounds	Furamidine (DB75)	Metronidazole-sensitive	Comparable to Metronidazole	-	[11]
	DB818	Metronidazole-sensitive & resistant	≤1	-	[11]
Nitroindazoles	Compound 6	Metronidazole-resistant	1.3	-	[12]
	Compound 10	Metronidazole-resistant	0.5	-	[12]
Phenylthiazolylbenzene Sulfonamides	Compound 7f	-	<0.93	-	

Table 2: In Vitro Activity of Natural Products against Trichomonas vaginalis

© 2026 BenchChem. All rights reserved.

Compound Class	Compound	Source	IC50 (μM)	Reference
Glycoalkaloids	α-Chaconine	Potato peels	-	[13]
	α-Solanine	Potato peels	10.9–16.8	[14]
	α-Tomatine	Tomato	2.0–7.9	[14]
Polyphenols	Resveratrol	Grapes	-	[3]
	Quercetin	Potato peels	-	[13]
Terpenoids	(+)-α-Bisabolol	Essential oils	-	[13]
Flavonoids and Tannins	Manilkara rufula extracts	Manilkara rufula	-	[3]

Table 3: Cytotoxicity of Potential **Trichomonacid**al Compounds against Mammalian Cell Lines

Compound Class	Compound	Cell Line	CC50 (μM)	Selectivity Index (SI)	Reference
Nitroindazoles	Compound 3	Vero	74.7	-	[12][15]
	Compound 9	Vero	59.1	-	[12][15]
Phenylthiazolylbenzene Sulfonamides	Compound 7f	-	>10	>4556.70	

Mandatory Visualizations

The following diagrams, created using the DOT language, illustrate key workflows and signaling pathways relevant to the initial screening of **trichomonacid**al agents.

Experimental Workflows

© 2026 BenchChem. All rights reserved.

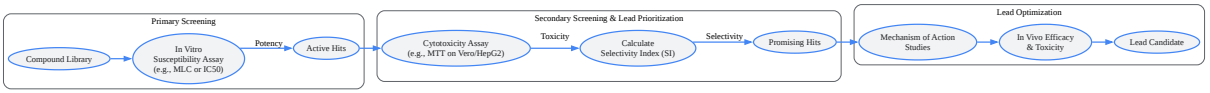

Click to download full resolution via product page

Figure 1: A generalized workflow for the discovery of **trichomonacid**al agents.

© 2026 BenchChem. All rights reserved.

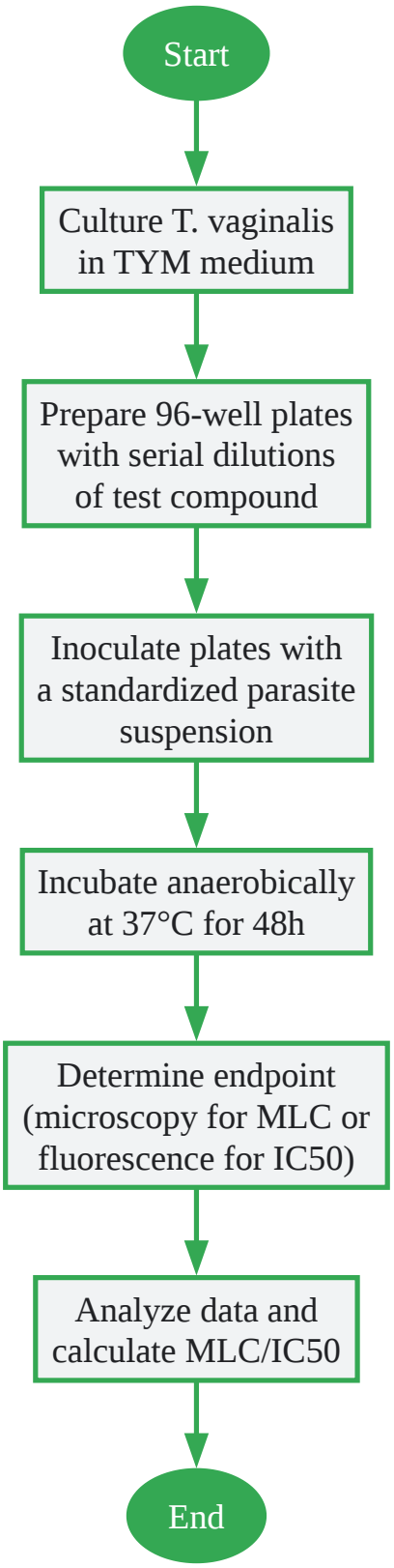

Click to download full resolution via product page

Figure 2: Experimental workflow for in vitro susceptibility testing.

© 2026 BenchChem. All rights reserved.

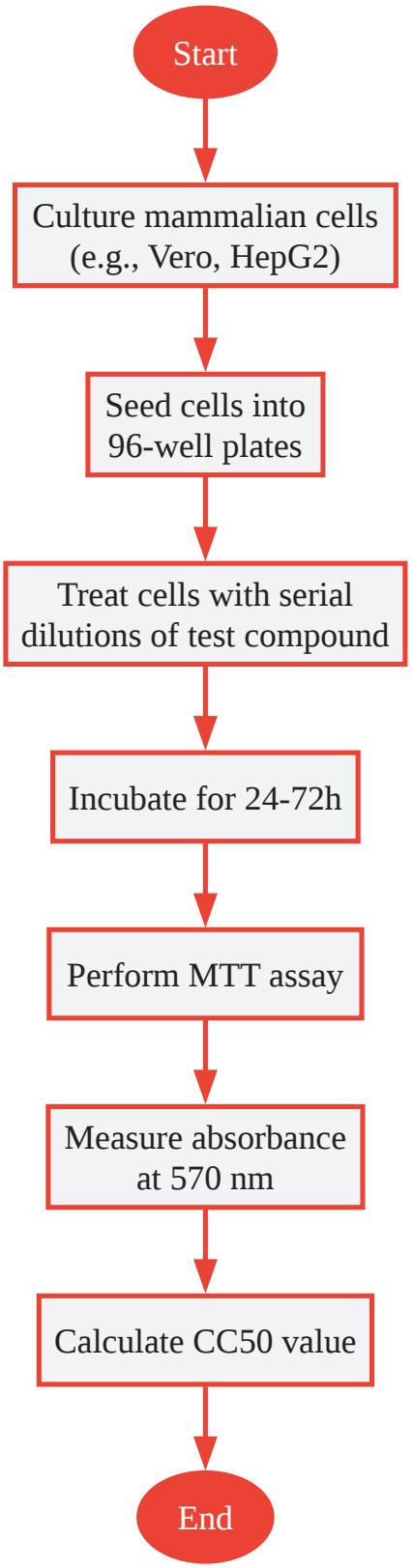

Click to download full resolution via product page

Figure 3: Workflow for determining cytotoxicity using the MTT assay.

© 2026 BenchChem. All rights reserved.

Signaling Pathways as Potential Drug Targets

While the precise signaling pathways within T. vaginalis are still under active investigation, several have been identified as potentially crucial for parasite viability and virulence, making them attractive targets for novel drug development.

© 2026 BenchChem. All rights reserved.

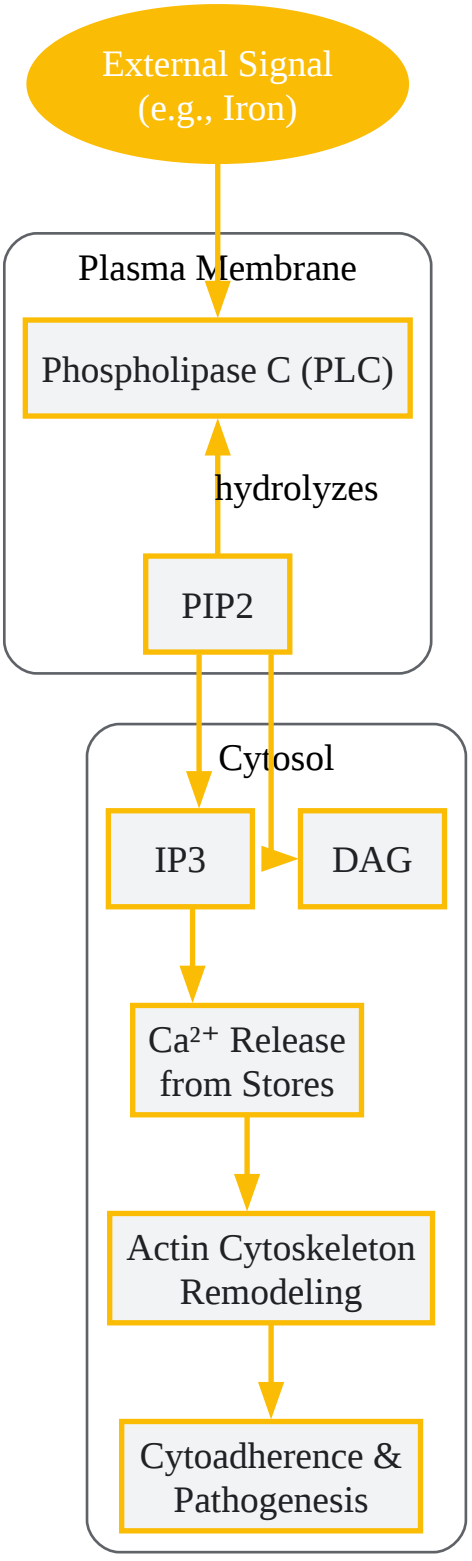

Click to download full resolution via product page

© 2026 BenchChem. All rights reserved.

Figure 4: A simplified representation of the PIP2-mediated calcium signaling pathway in *T. vaginalis*.

Recent studies suggest that phosphatidylinositol 4,5-bisphosphate (PIP2) signaling plays a role in regulating intracellular calcium levels, which in turn modulates the actin cytoskeleton, a key factor in the parasite's ability to adhere to host cells[1][16]. Iron appears to be an important environmental cue that influences this pathway[1].

Conclusion

The initial screening of potential **trichomonacid**al agents is a multifaceted process that requires robust and standardized methodologies. This guide provides a framework for conducting these essential early-stage evaluations, from determining a compound's in vitro efficacy and cytotoxicity to understanding its potential mechanism of action. By adhering to these detailed protocols and systematically evaluating the resulting data, researchers can more effectively identify and prioritize promising new candidates for the treatment of trichomoniasis, ultimately addressing the growing challenge of drug resistance.

Need Custom Synthesis?

BenchChem offers custom synthesis for rare earth carbides and specific isotopiclabeling.

Email: info@benchchem.com or Request Quote Online.

References

- 1. PIP2 regulating calcium signal modulates actin cytoskeleton-dependent cytoadherence and cytolytic capacity in the protozoan parasite Trichomonas vaginalis - PubMed [pubmed.ncbi.nlm.nih.gov]
- 2. stacks.cdc.gov [stacks.cdc.gov]
- 3. Home Treatments for Trichomoniasis: Do They Work? [healthline.com]
- 4. globalresearchonline.net [globalresearchonline.net]
- 5. reframeDB [reframedb.org]
- 6. ijcmas.com [ijcmas.com]
- 7. Binding of fibronectin by Trichomonas vaginalis is influenced by iron and calcium - PubMed [pubmed.ncbi.nlm.nih.gov]

© 2026 BenchChem. All rights reserved.

- 8. In Vitro Testing of Trichomonas vaginalis Drug Susceptibility: Evaluation of Minimal Lethal Concentrations for Metronidazole and Tinidazole That Correspond With Treatment Failure - PMC [pmc.ncbi.nlm.nih.gov]
- 9. In Vitro Testing of Trichomonas vaginalis Drug Susceptibility: Evaluation of Minimal Lethal Concentration for Secnidazole That Correlates With Treatment Success - PubMed [pubmed.ncbi.nlm.nih.gov]
- 10. Drug library screening against metronidazole-sensitive and metronidazole-resistant Trichomonas vaginalis isolates [stacks.cdc.gov]
- 11. Activities of Dicationic Compounds against Trichomonas vaginalis - PMC [pmc.ncbi.nlm.nih.gov]
- 12. docta.ucm.es [docta.ucm.es]
- 13. Anti-trichomonad activities of different compounds from foods, marine products, and medicinal plants: a review - PMC [pmc.ncbi.nlm.nih.gov]
- 14. researchgate.net [researchgate.net]
- 15. docta.ucm.es [docta.ucm.es]
- 16. researchgate.net [researchgate.net]

- To cite this document: BenchChem. [Initial Screening of Potential Trichomonacidal Agents: A Technical Guide]. BenchChem, [2026]. [Online PDF]. Available at: [https://www.benchchem.com/product/b1681383/docs#initial-screening-of-potential-trichomonacidal-agents-a-technical-guide]

Disclaimer & Data Validity:

The information provided in this document is for Research Use Only (RUO) and is strictly not intended for diagnostic or therapeutic procedures. While BenchChem strives to provide accurate protocols, we make no warranties, express or implied, regarding the fitness of this product for every specific experimental setup.

Technical Support: The protocols provided are for reference purposes. Unsure if this reagent suits your experiment?

Need Industrial/Bulk Grade? Request Custom Synthesis Quote

© 2026 BenchChem. All rights reserved.

BenchChem

Our mission is to be the trusted global source of essential and advanced chemicals, empowering scientists and researchers to drive progress in science and industry.

Contact

Address: 3281 E Guasti Rd

Ontario, CA 91761, United States

Phone: (601) 213-4426

Email: info@benchchem.com

Contact our Ph.D. Support Team for a compatibility check

© 2026 BenchChem. All rights reserved.