Application Note: Electrosynthesis of Sodium Perchlorate via Anodic Oxidation

Author: BenchChem Technical Support Team. **Date**: April 2026

Compound of Interest	
Compound Name:	*Sodium chlorate*
CAS No.:	*7775-09-9*
Cat. No.:	*B1681040*

Get Quote

Executive Summary & Mechanistic Context

Sodium perchlorate ($NaClO_4$) is a critical high-purity precursor utilized in the formulation of propellants, pyrotechnics, and specialized pharmaceutical agents. Industrially, the synthesis of perchlorates is achieved almost exclusively through the continuous anodic oxidation of **sodium chlorate** ($NaClO_3$) 1.

The core thermodynamic challenge of this synthesis lies in the standard potential of the anodic reaction (1.19 V), which is perilously close to the standard potential for water oxidation (1.228 V) 1. If an inappropriate anode material is selected, the applied current will preferentially drive oxygen evolution rather than chlorate oxidation, plummeting the current efficiency. Therefore, the causality of electrode selection dictates that the anode must possess a uniquely high oxygen overpotential. Smooth platinum and lead dioxide (β-PbO_2) are the only industrially viable materials capable of suppressing parasitic oxygen evolution while facilitating the generation of adsorbed radical intermediates that yield perchlorate 2.

© 2026 BenchChem. All rights reserved.

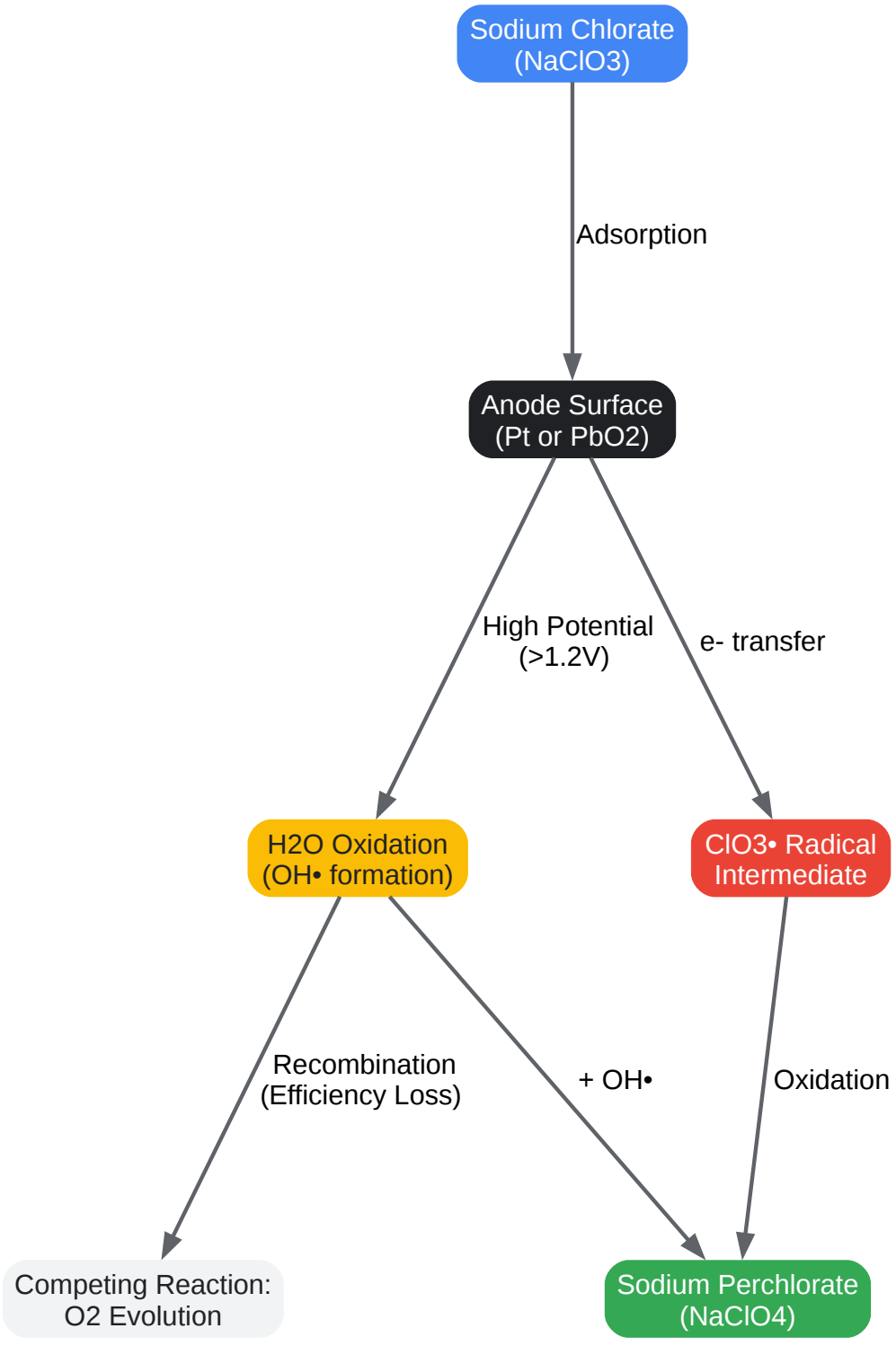

Click to download full resolution via product page

Electrochemical mechanism of chlorate to perchlorate oxidation.

© 2026 BenchChem. All rights reserved.

Electrode Selection & Process Parameters

The choice of anode dictates the operational parameters of the cell. Platinum provides near-ideal corrosion resistance and the highest current efficiency, simplifying downstream electrolyte processing due to the absence of insoluble erosion products 3. However, due to its prohibitive cost, Graphite Substrate Lead Dioxide (GSLD) or titanium-supported PbO2are heavily favored for scalable synthesis 1.

Quantitative Parameter Comparison

Parameter	Platinum Anode	Lead Dioxide (PbO2) Anode	Causality / Impact
Current Density	30−50 A/dm2	23−25 A/dm2	Higher densities on PbO2risk thermal degradation and substrate detachment 1.
Temperature	50−60∘C	43−45∘C	Exceeding 45∘C with PbO2increases oxygen evolution and accelerates anode erosion 1.
Current Efficiency	>95%	68%−78.5%	PbO2has a slightly lower oxygen overpotential than Pt. Dual-bed flow cells can push PbO2 efficiency to 78.5% 4.
Cathode Material	Stainless / Mild Steel	Stainless / Mild Steel	Steel is robust; copper/brass risk anodic contamination upon erosion 3.

Self-Validating Experimental Protocol

© 2026 BenchChem. All rights reserved.

To ensure scientific integrity, the following protocol is designed as a self-validating system. Each phase includes built-in quality control checks to confirm that the reaction is proceeding via the intended mechanistic pathway rather than parasitic side reactions.

Phase 1: Electrolyte Preparation

- Primary Solute: Dissolve analytical-grade **sodium chlorate** ($NaClO_3$) in deionized water to create a saturated solution (approximately 600−700 g/L at room temperature).
- Efficiency Additive: Add 2−4 g/L of sodium dichromate ($Na_2Cr_2O_7$) 3.
  - Causality: Dichromate ions migrate to the cathode and form a microscopic, semi-permeable chromium hydroxide ($Cr(OH)_3$) film. This film acts as a kinetic barrier, selectively allowing protons to reduce to hydrogen gas while preventing the newly synthesized perchlorate from contacting the cathode and reducing back to chlorate.

Phase 2: Cell Assembly & Electrolysis

- Electrode Placement: Submerge the PbO_2anode and stainless steel cathode into the cell. Maintain a tight inter-electrode gap (2−3 mm) to minimize ohmic drop (IR loss) in the electrolyte.
- Current Application: Apply a constant direct current to achieve an anodic current density of 25 A/dm^2 1.
- Thermal Regulation: Engage active cooling to maintain the bulk electrolyte temperature strictly between 43∘C and 45∘C 1.

Phase 3: In-Process Self-Validation

- Voltage Monitoring: Continuously log the cell voltage.
  - Validation Check: A stable voltage indicates steady-state oxidation. A sudden spike in voltage (>15% increase) indicates anode passivation or localized depletion of chlorate, signaling that the reaction is shifting entirely to water oxidation.
- pH Profiling: Monitor the pH, which should remain slightly acidic to neutral.

© 2026 BenchChem. All rights reserved.

- Validation Check: A rapid drop in pH indicates excessive oxygen evolution (which generates H+ ions), serving as a real-time indicator of dropping current efficiency.

Phase 4: Endpoint Determination & Downstream Processing

- Chemical Assay: The theoretical time required is calculated via Faraday's Law based on the total moles of chlorate. As the theoretical endpoint approaches, extract 1 mL aliquots.
- Validation Check: Titrate the aliquot with a reducing agent (e.g., ferrous ammonium sulfate) to quantify residual chlorate. The reaction is complete when residual chlorate falls below 1 g/L .
- Crystallization: Filter the electrolyte to remove any insoluble PbO2mud (if using GSLD) 1. Evaporate the solvent under reduced pressure to crystallize high-purity sodium perchlorate.

© 2026 BenchChem. All rights reserved.

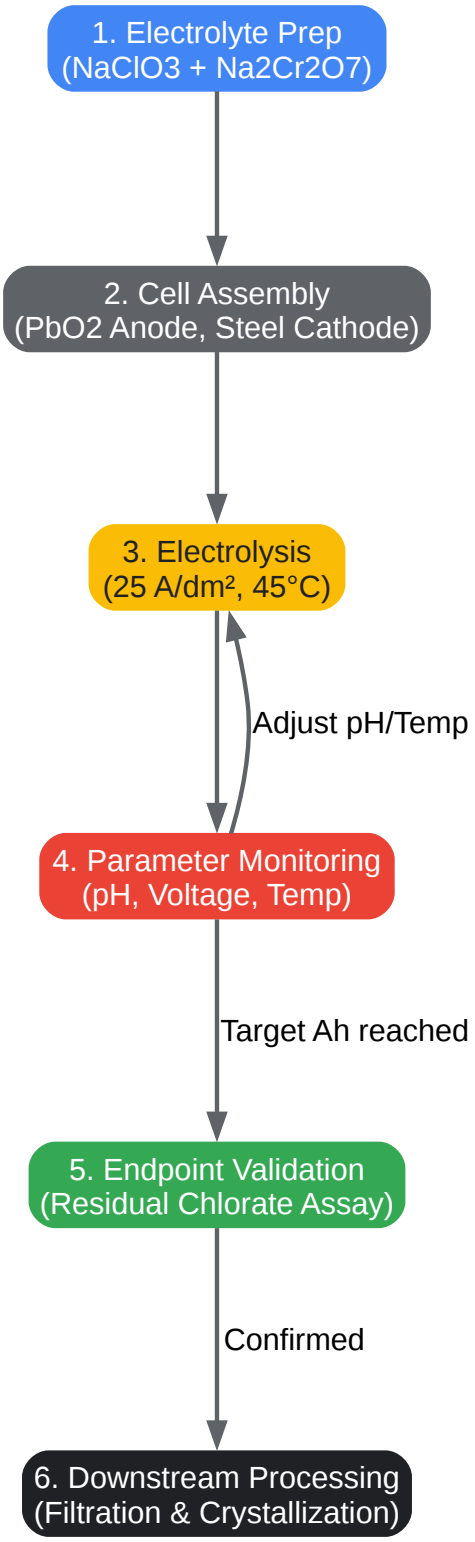

Click to download full resolution via product page

Step-by-step workflow for perchlorate electrosynthesis.

© 2026 BenchChem. All rights reserved.

References

- The Manufacture of Perchlorate by Direct Method Using Graphite Substrate Lead Dioxide (Gsld) Anode, rdd.edu.iq.
- Preparing perchlorates - PyroGuide, pyrodata.com.
- Continuous electrosynthesis of Sodium perchlorate using Lead dioxide, The Open Chemical Engineering Journal.
- Mechanism of anodic oxidation of chlorate to perchlorate on platinum electrodes, Pure (tue.nl).

Need Custom Synthesis?

BenchChem offers custom synthesis for rare earth carbides and specific isotopiclabeling.

Email: info@benchchem.com or Request Quote Online.

Sources

- 1. iasj.rdd.edu.iq [iasj.rdd.edu.iq]
- 2. pure.tue.nl [pure.tue.nl]
- 3. Preparing perchlorates - PyroGuide [pyrodata.com]
- 4. openchemicalengineeringjournal.com [openchemicalengineeringjournal.com]
- To cite this document: BenchChem. [Application Note: Electrosynthesis of Sodium Perchlorate via Anodic Oxidation]. BenchChem, [2026]. [Online PDF]. Available at: [https://www.benchchem.com/product/b1681040/docs#application-note-electrosynthesis-of-sodium-perchlorate-via-anodic-oxidation]

Disclaimer & Data Validity:

The information provided in this document is for Research Use Only (RUO) and is strictly not intended for diagnostic or therapeutic procedures. While BenchChem strives to provide accurate protocols, we make no warranties, express or implied, regarding the fitness of this product for every specific experimental setup.

Technical Support: The protocols provided are for reference purposes. Unsure if this reagent suits your experiment?

© 2026 BenchChem. All rights reserved.

Need Industrial/Bulk Grade? Request Custom Synthesis Quote

BenchChem

Our mission is to be the trusted global source of essential and advanced chemicals, empowering scientists and researchers to drive progress in science and industry.

Contact

Address: 3281 E Guasti Rd

Ontario, CA 91761, United States

Phone: (601) 213-4426

Email: info@benchchem.com

Contact our Ph.D. Support Team for a compatibility check

© 2026 BenchChem. All rights reserved.