The Impact of SB-267268 on Endothelial Cell Behavior: A Technical Guide

Author: BenchChem Technical Support Team. **Date**: April 2026

Compound of Interest

Compound Name:	*SB-267268*
CAS No.:	*205678-26-8*
Cat. No.:	*B1680821*

Get Quote

For Researchers, Scientists, and Drug Development Professionals

Introduction

SB-267268 is a potent, nonpeptidic antagonist of αvβ3 and αvβ5 integrins. These integrins are key players in the process of angiogenesis, the formation of new blood vessels from pre-existing ones. Angiogenesis is a critical process in both normal physiological functions, such as wound healing, and in pathological conditions, most notably in tumor growth and metastasis, as well as in ischemic retinopathies. This technical guide provides an in-depth overview of the effects of **SB-267268** on endothelial cell behavior, summarizing key quantitative data, detailing experimental protocols, and visualizing the underlying signaling pathways.

Core Mechanism of Action

SB-267268 exerts its biological effects by selectively binding to and inhibiting the function of αvβ3 and αvβ5 integrins. These integrins are expressed on the surface of activated endothelial cells and mediate their interaction with extracellular matrix (ECM) proteins like vitronectin. This interaction is crucial for endothelial cell adhesion, migration, proliferation, and survival – all

© 2026 BenchChem. All rights reserved.

essential steps in the angiogenic cascade. By blocking these integrins, **SB-267268** disrupts the signaling pathways that drive neovascularization.

Quantitative Data on the Effects of SB-267268

While extensive quantitative data on the direct effects of **SB-267268** on primary endothelial cells in vitro is not readily available in the public literature, studies on other cell types and in vivo models provide strong evidence of its anti-angiogenic potential.

Assay	Cell Type	Ligand/Substrate	Endpoint	Result	Citation
Cell Adhesion	αvβ3-transfected HEK293 cells	RGD-containing matrix proteins	Inhibition of cell attachment	IC50: 12 nM	[1][2]
Cell Migration	Human Aortic Smooth Muscle Cells	Vitronectin	Inhibition of cell migration	IC50: ~12.3 nM	[1][2]
Cell Migration	Rat Aortic Smooth Muscle Cells	Vitronectin	Inhibition of cell migration	IC50: ~3.6 nM	[1][2]
Pathological Angiogenesis	Mouse Model of Retinopathy of Prematurity	In vivo	Reduction of blood vessel profiles in the inner retina	~50% reduction	[1][2]
Gene Expression	Mouse Model of Retinopathy of Prematurity	In vivo	mRNA levels of VEGF and VEGFR-2	Reduced	[1][2]

Note: The provided IC50 values demonstrate the potency of **SB-267268** in inhibiting cell adhesion and migration in relevant cell types. Further studies are required to establish the

© 2026 BenchChem. All rights reserved.

precise quantitative effects on endothelial cell proliferation, migration, and tube formation.

Signaling Pathways Modulated by SB-267268

The antagonism of αvβ3 and αvβ5 integrins by **SB-267268** disrupts critical downstream signaling cascades that promote endothelial cell survival, proliferation, and migration.

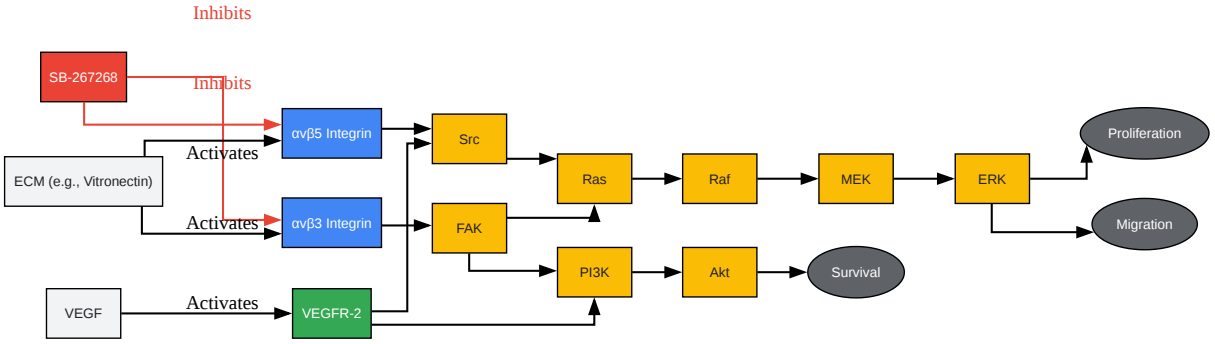

Click to download full resolution via product page

SB-267268's inhibitory effect on αvβ3/αvβ5 signaling pathways.

Experimental Protocols

Detailed methodologies for key experiments to assess the impact of **SB-267268** on endothelial cell behavior are provided below.

Endothelial Cell Adhesion Assay

This assay quantifies the ability of endothelial cells to adhere to an ECM-coated surface and the inhibitory effect of compounds like **SB-267268**.

Materials:

- Human Umbilical Vein Endothelial Cells (HUVECs)

© 2026 BenchChem. All rights reserved.

- Endothelial Cell Growth Medium (EGM-2)
- 96-well tissue culture plates
- Extracellular matrix protein (e.g., Vitronectin, Fibronectin)
- Bovine Serum Albumin (BSA)
- Calcein-AM fluorescent dye
- **SB-267268**
- Plate reader with fluorescence capabilities

Protocol:

- Plate Coating: Coat the wells of a 96-well plate with vitronectin (or other ECM protein) at a concentration of 1-10 µg/mL in phosphate-buffered saline (PBS) and incubate for 1 hour at 37°C.
- Blocking: Wash the wells with PBS and block non-specific binding by incubating with 1% BSA in PBS for 30 minutes at 37°C.
- Cell Preparation: Culture HUVECs to 80-90% confluency. Detach the cells using a non-enzymatic cell dissociation solution, wash with serum-free medium, and resuspend in serum-free medium containing 0.5% BSA.
- Cell Labeling: Incubate the cells with Calcein-AM (2 µM) for 30 minutes at 37°C.
- Treatment: Pre-incubate the labeled cells with various concentrations of **SB-267268** for 30 minutes at 37°C.
- Adhesion: Add the cell suspension (5 x 10^4 cells/well) to the coated and blocked wells and incubate for 1-2 hours at 37°C.
- Washing: Gently wash the wells with PBS to remove non-adherent cells.

© 2026 BenchChem. All rights reserved.

- Quantification: Measure the fluorescence of the remaining adherent cells using a plate reader (Excitation: 485 nm, Emission: 520 nm).

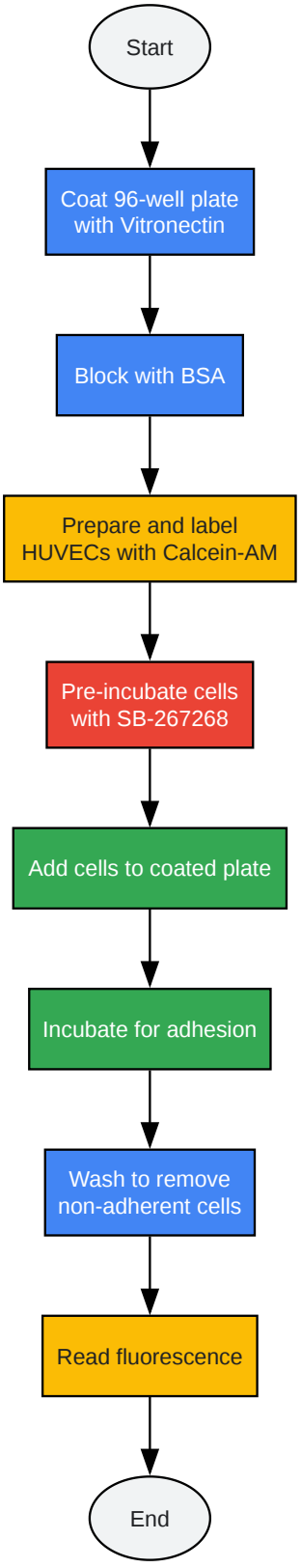

© 2026 BenchChem. All rights reserved.

Click to download full resolution via product page

Workflow for the endothelial cell adhesion assay.

Endothelial Cell Migration Assay (Boyden Chamber)

This assay measures the chemotactic migration of endothelial cells through a porous membrane towards a chemoattractant.

Materials:

- HUVECs
- EGM-2
- Boyden chamber inserts (8 µm pore size)
- 24-well plates
- Chemoattractant (e.g., VEGF, FBS)
- **SB-267268**
- Cotton swabs
- Staining solution (e.g., Diff-Quik)

Protocol:

- Chamber Preparation: Place Boyden chamber inserts into the wells of a 24-well plate.
- Chemoattractant: Add medium containing a chemoattractant (e.g., 20 ng/mL VEGF) to the lower chamber.
- Cell Preparation: Culture HUVECs to 80-90% confluency. Starve the cells in serum-free medium for 4-6 hours. Detach and resuspend the cells in serum-free medium.
- Treatment: Add various concentrations of **SB-267268** to the cell suspension.

© 2026 BenchChem. All rights reserved.

- Seeding: Add the cell suspension (1 x 10^5 cells/insert) to the upper chamber of the inserts.
- Incubation: Incubate for 4-6 hours at 37°C to allow for cell migration.
- Cell Removal: Remove non-migrated cells from the upper surface of the membrane with a cotton swab.
- Fixation and Staining: Fix the migrated cells on the lower surface of the membrane with methanol and stain with a suitable staining solution.
- Quantification: Count the number of migrated cells in several high-power fields under a microscope.

© 2026 BenchChem. All rights reserved.

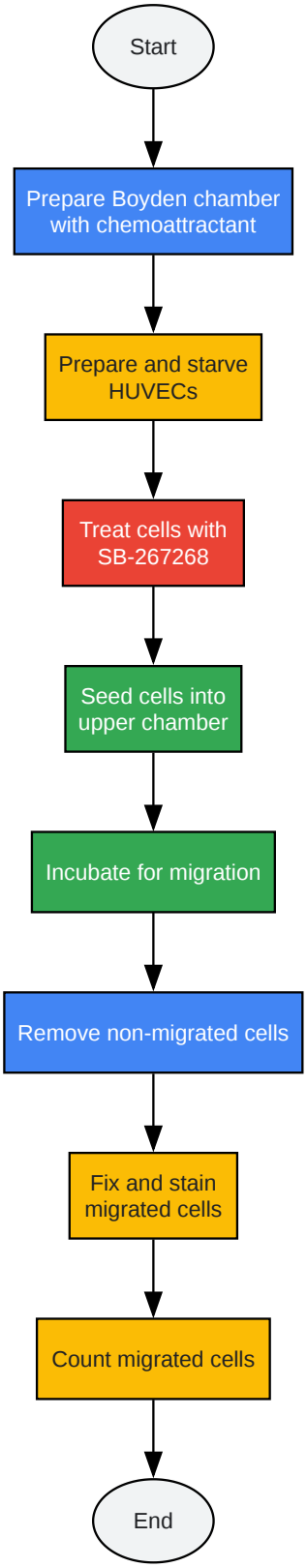

Click to download full resolution via product page

Workflow for the Boyden chamber cell migration assay.

© 2026 BenchChem. All rights reserved.

Endothelial Cell Tube Formation Assay

This assay assesses the ability of endothelial cells to form capillary-like structures on a basement membrane matrix.

Materials:

- HUVECs
- EGM-2
- Growth factor-reduced Matrigel
- 96-well plates
- **SB-267268**
- Calcein-AM fluorescent dye (optional)
- Inverted microscope with imaging software

Protocol:

- Matrigel Coating: Thaw Matrigel on ice and coat the wells of a 96-well plate with 50 µL of Matrigel. Incubate at 37°C for 30-60 minutes to allow for polymerization.
- Cell Preparation: Culture and detach HUVECs as previously described. Resuspend the cells in EGM-2.
- Treatment: Add various concentrations of **SB-267268** to the cell suspension.
- Seeding: Seed the HUVEC suspension (1.5 x 10^4 cells/well) onto the polymerized Matrigel.
- Incubation: Incubate for 6-18 hours at 37°C.
- Visualization: Observe the formation of tube-like structures using an inverted microscope. If using Calcein-AM, incubate the cells with the dye for 30 minutes before imaging.

© 2026 BenchChem. All rights reserved.

- Quantification: Capture images and quantify tube formation by measuring parameters such as the number of nodes, number of branches, and total tube length using image analysis software.

© 2026 BenchChem. All rights reserved.

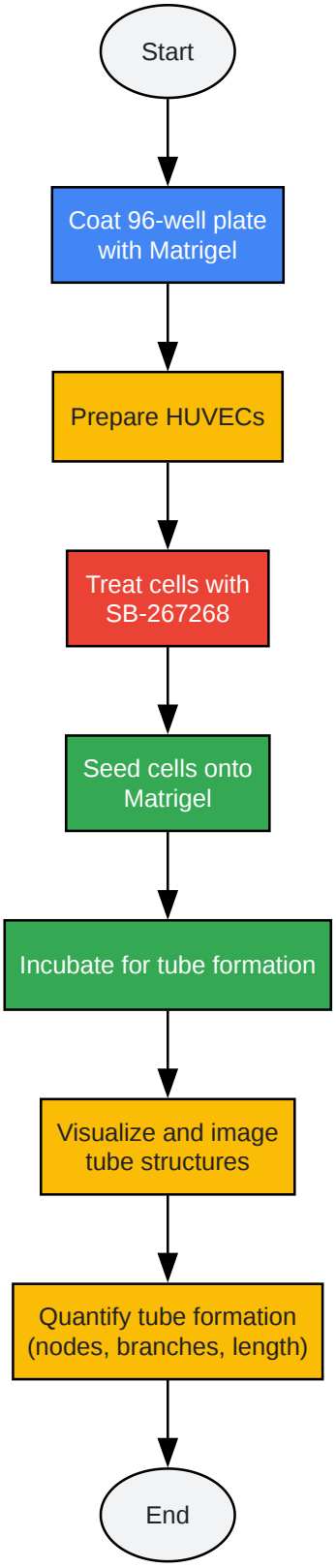

Click to download full resolution via product page

Workflow for the endothelial cell tube formation assay.

© 2026 BenchChem. All rights reserved.

Conclusion

SB-267268 is a promising anti-angiogenic agent that effectively targets αvβ3 and αvβ5 integrins. While in vivo data strongly supports its efficacy in reducing pathological neovascularization, further in vitro studies on endothelial cells are needed to fully quantify its direct effects on proliferation, migration, and tube formation. The experimental protocols and signaling pathway information provided in this guide offer a solid framework for researchers and drug development professionals to further investigate the therapeutic potential of **SB-267268** and other integrin antagonists.

Need Custom Synthesis?

BenchChem offers custom synthesis for rare earth carbides and specific isotopiclabeling.

Email: info@benchchem.com or Request Quote Online.

References

- 1. SB-267268, a nonpeptidic antagonist of alpha(v)beta3 and alpha(v)beta5 integrins, reduces angiogenesis and VEGF expression in a mouse model of retinopathy of prematurity - PubMed [pubmed.ncbi.nlm.nih.gov]
- 2. iovs.arvojournals.org [iovs.arvojournals.org]
- To cite this document: BenchChem. [The Impact of SB-267268 on Endothelial Cell Behavior: A Technical Guide]. BenchChem, [2026]. [Online PDF]. Available at: [https://www.benchchem.com/product/b1680821/docs#the-impact-of-sb-267268-on-endothelial-cell-behavior-a-technical-guide]

Disclaimer & Data Validity:

The information provided in this document is for Research Use Only (RUO) and is strictly not intended for diagnostic or therapeutic procedures. While BenchChem strives to provide accurate protocols, we make no warranties, express or implied, regarding the fitness of this product for every specific experimental setup.

Technical Support: The protocols provided are for reference purposes. Unsure if this reagent suits your experiment?

Need Industrial/Bulk Grade? Request Custom Synthesis Quote

BenchChem

Our mission is to be the trusted global source of essential and advanced chemicals, empowering scientists and researchers to drive progress in science and industry.

Contact

Address: 3281 E Guasti Rd

Ontario, CA 91761, United States

Phone: (601) 213-4426

Email: info@benchchem.com

Contact our Ph.D. Support Team for a compatibility check

© 2026 BenchChem. All rights reserved.