Technical Support Center: Overcoming Resistance to Anticancer Compounds

Author: BenchChem Technical Support Team. **Date**: April 2026

Compound of Interest

Compound Name:	*NSC-77053*
CAS No.:	*77308-57-7*
Cat. No.:	*B1680398*

Get Quote

Important Notice Regarding **NSC-77053**

Our comprehensive search for the compound "**NSC-77053**" did not yield any specific information related to a therapeutic agent, investigational drug, or research chemical. The identifier "NSC" is a numeric code assigned by the National Cancer Institute (NCI) to substances submitted for testing and evaluation; however, no public data for **NSC-77053** in this context is currently available. The predominant search result for "77053" corresponds to a commercially available toy product.

Therefore, creating a specific technical support center for overcoming resistance to **NSC-77053** is not feasible at this time.

To provide valuable information within your area of interest, we have compiled a technical support guide for a well-characterized class of investigational anticancer agents: SHP2 Inhibitors. Resistance to targeted therapies is a significant challenge in oncology research, and SHP2 inhibitors are a class of molecules for which resistance mechanisms are an active area of investigation.

© 2026 BenchChem. All rights reserved.

Technical Support Center: Overcoming Resistance to SHP2 Inhibitors

This technical support center provides troubleshooting guides and frequently asked questions (FAQs) for researchers, scientists, and drug development professionals working with SHP2 inhibitors. The content is presented in a question-and-answer format to directly address specific issues that may be encountered during experimentation.

Frequently Asked Questions (FAQs)

Q1: What is the primary mechanism of action for allosteric SHP2 inhibitors?

A1: Allosteric SHP2 inhibitors bind to a pocket that is accessible in the autoinhibited conformation of SHP2.[1] This locks the protein in its closed, inactive state, preventing the N-terminal SH2 domain from occluding the active site of the phosphatase (PTP) domain.[2] By stabilizing this inactive conformation, these inhibitors prevent SHP2 from being activated by upstream signals, such as those from receptor tyrosine kinases (RTKs), thereby inhibiting downstream signaling through pathways like the RAS-MAPK cascade.[3][4][5]

Q2: My cell line is not responding to the SHP2 inhibitor. What are the potential reasons for this intrinsic resistance?

A2: Intrinsic resistance to SHP2 inhibitors can arise from several factors:

- Downstream Mutations: The cancer cell line may harbor mutations in genes downstream of SHP2 in the signaling pathway, such as KRAS, BRAF, or MEK.[6] In such cases, inhibiting SHP2 will not affect the constitutively active downstream signaling.
- Alternative Pathway Dependence: The survival and proliferation of the cell line may be driven by signaling pathways that are independent of SHP2.
- Oncogenic PTPN11 Mutations: Certain cancer-associated mutations in the PTPN11 gene (which encodes SHP2), such as E76K or D61V, can bias SHP2 towards a hyperactive conformation, making it insensitive to allosteric inhibitors that bind to the closed conformation.[1]

© 2026 BenchChem. All rights reserved.

Q3: I am observing a rebound in ERK phosphorylation after initial successful inhibition with a SHP2 inhibitor. What is happening?

A3: This phenomenon is often due to adaptive resistance or feedback activation. Inhibition of the RAS-MAPK pathway can trigger feedback loops that lead to the upregulation and activation of receptor tyrosine kinases (RTKs) like EGFR, FGFR1, and ERBB3.[7][8] This reactivation of upstream signaling can overcome the inhibitory effect of the SHP2 inhibitor and lead to a rebound in p-ERK levels.

Q4: How can I overcome acquired resistance to a SHP2 inhibitor in my experiments?

A4: Acquired resistance to SHP2 inhibitors often involves the activation of bypass signaling pathways.[9] A common strategy to overcome this is through combination therapy. Combining a SHP2 inhibitor with an inhibitor of a reactivated pathway, such as a MEK inhibitor or an inhibitor of a specific RTK, can often restore sensitivity.[3][6][7] For example, combining a SHP2 inhibitor with trametinib (a MEK inhibitor) has shown efficacy in various cancer models.[7]

Troubleshooting Guides

Issue 1: High background signal or inconsistent results in Western blots for p-ERK.

- Question: My Western blot results for phosphorylated ERK (p-ERK) are inconsistent, showing high background or variable band intensity even in my control groups. What can I do?

- Answer:

  - Optimize Antibody Dilutions: Ensure you have empirically determined the optimal dilution for both your primary (anti-p-ERK and anti-total ERK) and secondary antibodies.

  - Blocking Conditions: Block the membrane for at least 1 hour at room temperature or overnight at 4°C. Common blocking agents include 5% non-fat dry milk or 5% bovine serum albumin (BSA) in TBST. For phospho-antibodies, BSA is often preferred.

  - Washing Steps: Increase the number and duration of your washes with TBST after antibody incubations to reduce background signal.

© 2026 BenchChem. All rights reserved.

- Loading Controls: Always include a loading control (e.g., β-actin, GAPDH) to ensure equal protein loading across all lanes. Normalize the p-ERK signal to the total ERK signal to account for any variations in total ERK levels.[6]
- Fresh Lysis Buffer: Use fresh lysis buffer containing phosphatase and protease inhibitors to prevent dephosphorylation of your target protein during sample preparation.

Issue 2: Lack of a clear dose-response curve in cell viability assays.

- Question: I am not observing a clear dose-dependent effect of the SHP2 inhibitor on my cells in a 72-hour viability assay. What should I check?
- Answer:
  - Assay Duration: The effects of SHP2 inhibition on cell viability may take longer to manifest. Consider extending your time course to 96 or 120 hours.[6]
  - Compound Stability: Ensure the SHP2 inhibitor is stable in your cell culture medium for the duration of the experiment. Prepare fresh dilutions for each experiment.
  - Cell Seeding Density: Optimize the initial cell seeding density. If cells become over-confluent before the end of the assay, it can mask the inhibitory effects of the compound.
  - DMSO Concentration: Ensure the final concentration of your solvent (e.g., DMSO) is consistent across all wells and is at a non-toxic level (typically ≤ 0.1%).[6]
  - Intrinsic Resistance: As mentioned in the FAQs, your cell line may be intrinsically resistant to SHP2 inhibition. Consider testing a known sensitive cell line as a positive control.

Experimental Protocols

Protocol 1: Western Blotting for p-ERK and Total ERK

- Cell Lysis: After treatment with the SHP2 inhibitor, wash cells with ice-cold PBS and lyse with RIPA buffer supplemented with protease and phosphatase inhibitors.
- Protein Quantification: Determine the protein concentration of each lysate using a BCA or Bradford assay.

© 2026 BenchChem. All rights reserved.

- SDS-PAGE: Load equal amounts of protein (e.g., 20-30 µg) onto a polyacrylamide gel and separate the proteins by electrophoresis.
- Protein Transfer: Transfer the separated proteins to a PVDF or nitrocellulose membrane.
- Blocking: Block the membrane with 5% BSA in TBST for 1 hour at room temperature.[6]
- Primary Antibody Incubation: Incubate the membrane with primary antibodies against p-ERK (e.g., 1:1000 dilution) and total ERK (e.g., 1:1000 dilution) overnight at 4°C.[6]
- Washing: Wash the membrane three times with TBST for 10 minutes each.
- Secondary Antibody Incubation: Incubate with an appropriate HRP-conjugated secondary antibody (e.g., 1:5000 dilution) for 1 hour at room temperature.[6]
- Detection: Visualize the protein bands using an ECL substrate and a chemiluminescence imaging system.[6]
- Analysis: Quantify the band intensities and normalize the p-ERK signal to the total ERK signal.

Protocol 2: Cell Viability (MTS/MTT) Assay

- Cell Seeding: Seed cells in a 96-well plate at a predetermined optimal density and allow them to attach overnight.[6]
- Compound Treatment: Treat the cells with a serial dilution of the SHP2 inhibitor. Include a vehicle control (e.g., DMSO).
- Incubation: Incubate the plate for the desired duration (e.g., 72, 96, or 120 hours).
- Reagent Addition: Add MTS or MTT reagent to each well according to the manufacturer's instructions and incubate for 1-4 hours.
- Absorbance Reading: Measure the absorbance at the appropriate wavelength using a plate reader.

© 2026 BenchChem. All rights reserved.

- Data Analysis: Normalize the absorbance values to the vehicle control to determine the percentage of cell viability. Plot the results to determine the IC50 value.

Quantitative Data Summary

Table 1: Example IC50 Values for a Hypothetical SHP2 Inhibitor in Different Cancer Cell Lines

Cell Line	Cancer Type	Key Mutations	SHP2 Inhibitor IC50 (nM)	Combination IC50 (nM) with MEK Inhibitor
KYSE-520	Esophageal Squamous Cell Carcinoma	RTK amplification	50	10
NCI-H358	Non-Small Cell Lung Cancer	KRAS G12C	>10,000	500
Calu-3	Non-Small Cell Lung Cancer	Wild-type RAS	200	40
PANC-1	Pancreatic Cancer	KRAS G12D	>10,000	1,500

Data in this table is illustrative and not based on **NSC-77053**.

Signaling Pathways and Experimental Workflows

© 2026 BenchChem. All rights reserved.

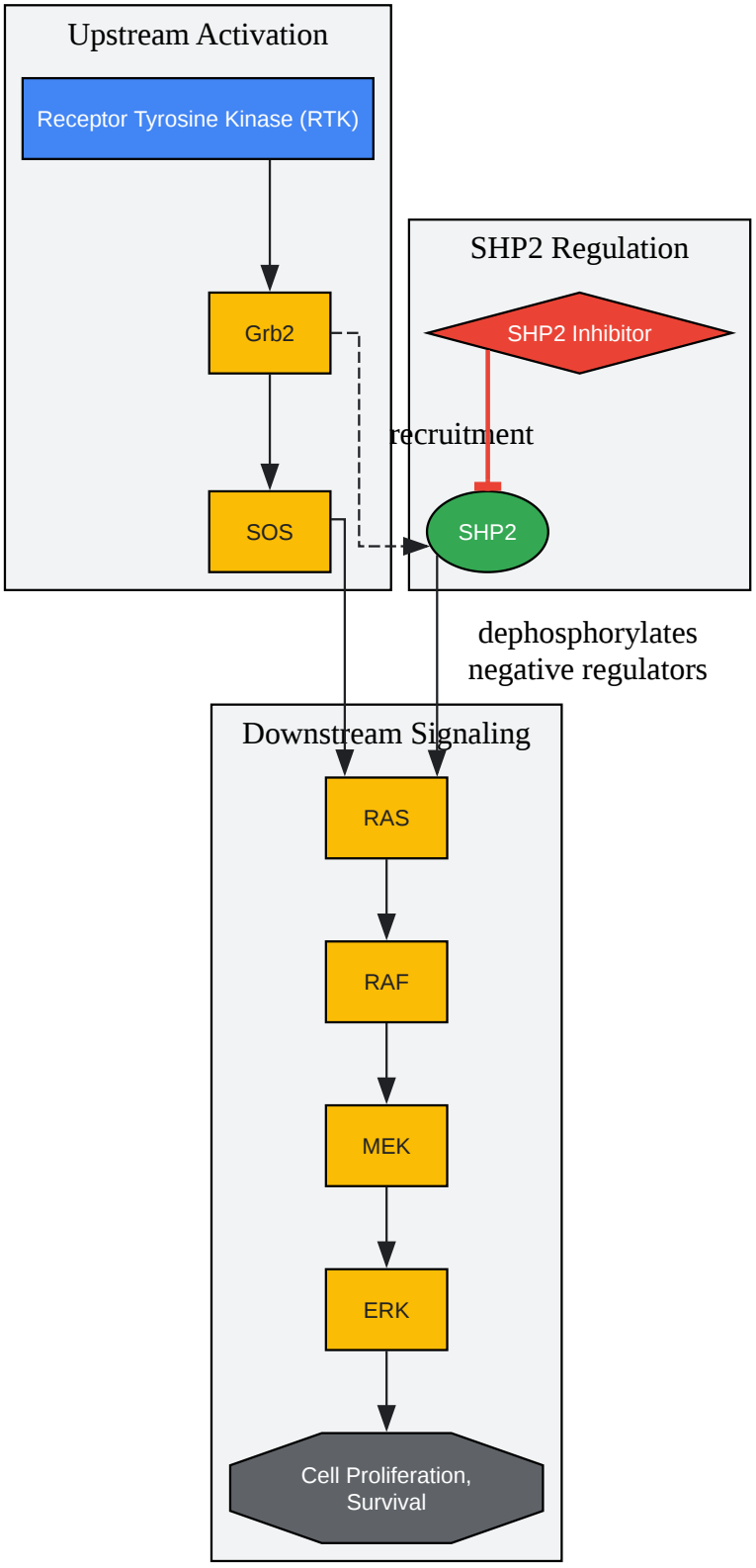

Click to download full resolution via product page

Caption: Simplified SHP2 signaling pathway and point of inhibition.

© 2026 BenchChem. All rights reserved.

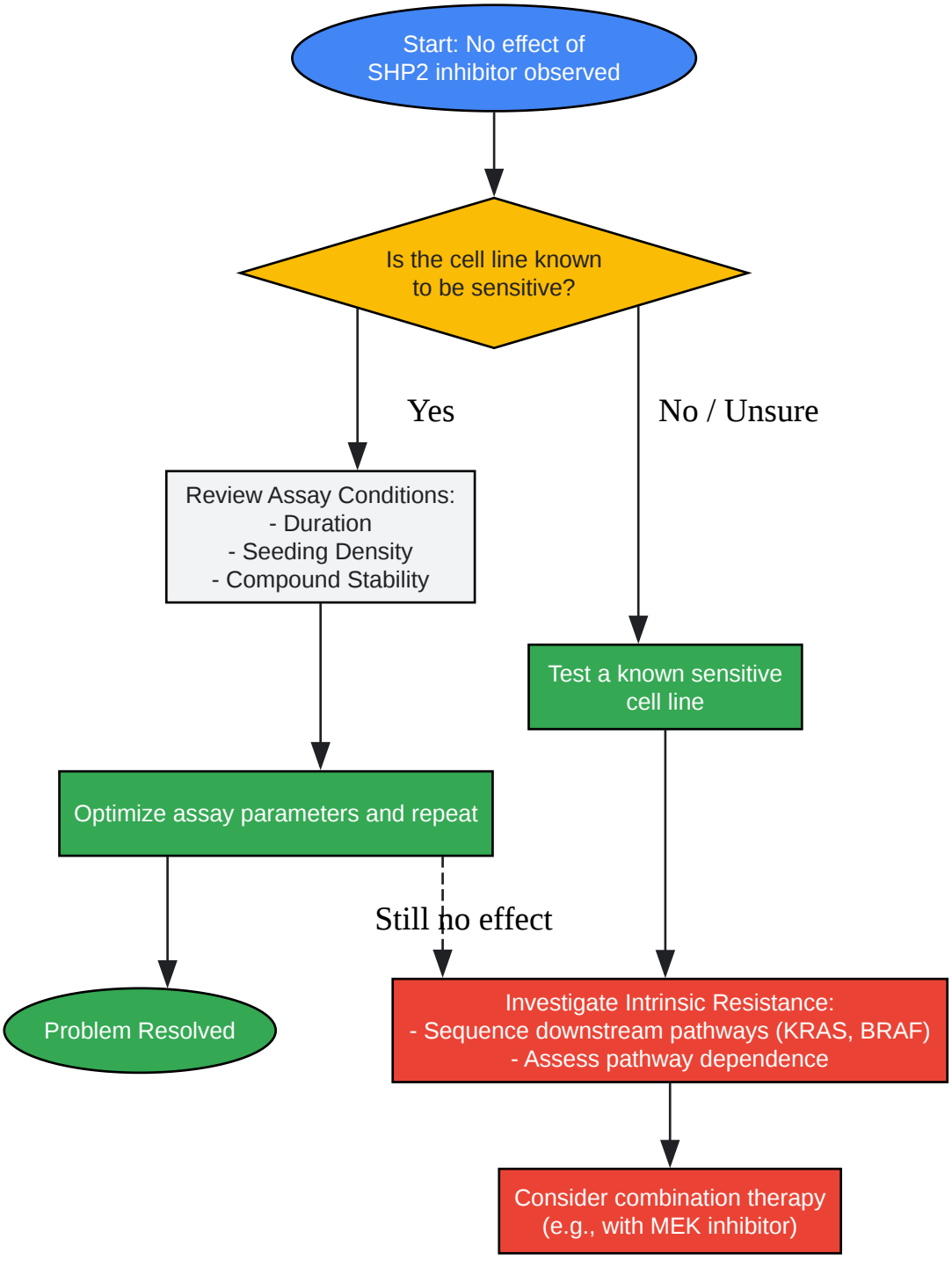

Click to download full resolution via product page

Need Custom Synthesis?

BenchChem offers custom synthesis for rare earth carbides and specific isotopiclabeling.

Email: info@benchchem.com or Request Quote Online.

© 2026 BenchChem. All rights reserved.

References

- 1. selleckchem.com [selleckchem.com]
- 2. my.clevelandclinic.org [my.clevelandclinic.org]
- 3. A combination of novel NSC small molecule inhibitor along with doxorubicin inhibits proliferation of triple-negative breast cancer through metabolic reprogramming - PubMed [pubmed.ncbi.nlm.nih.gov]
- 4. LEGO Animal Crossing Stargazing with Celeste Building Toy 77053 : Target [target.com]
- 5. Robot or human? [walmart.com]
- 6. medkoo.com [medkoo.com]
- 7. NSC Number - Definition (v1) by National Cancer Institute | Qeios [qeios.com]
- 8. brickeconomy.com [brickeconomy.com]
- 9. medchemexpress.com [medchemexpress.com]

- To cite this document: BenchChem. [Technical Support Center: Overcoming Resistance to Anticancer Compounds]. BenchChem, [2026]. [Online PDF]. Available at: [https://www.benchchem.com/product/b1680398/docs#technical-support-center-overcoming-resistance-to-anticancer-compounds]

Disclaimer & Data Validity:

The information provided in this document is for Research Use Only (RUO) and is strictly not intended for diagnostic or therapeutic procedures. While BenchChem strives to provide accurate protocols, we make no warranties, express or implied, regarding the fitness of this product for every specific experimental setup.

Technical Support: The protocols provided are for reference purposes. Unsure if this reagent suits your experiment?

Need Industrial/Bulk Grade? Request Custom Synthesis Quote

© 2026 BenchChem. All rights reserved.

BenchChem

Our mission is to be the trusted global source of essential and advanced chemicals, empowering scientists and researchers to drive progress in science and industry.

Contact

Address: 3281 E Guasti Rd

Ontario, CA 91761, United States

Phone: (601) 213-4426

Email: info@benchchem.com

Contact our Ph.D. Support Team for a compatibility check

© 2026 BenchChem. All rights reserved.