A Comparative Guide to the Anticancer Potential of Pyrazole Derivatives

Author: BenchChem Technical Support Team. **Date**: May 2026

Compound of Interest

Compound Name:	*2-(1H-Pyrazol-3-yl)acetic acid hydrochloride*
CAS No.:	*118054-57-2*
Cat. No.:	*B168347*

Get Quote

For Researchers, Scientists, and Drug Development Professionals

The pyrazole scaffold represents a privileged structure in medicinal chemistry, forming the backbone of numerous compounds with significant anticancer properties. These derivatives have demonstrated efficacy across a spectrum of cancer cell lines, often rivaling or exceeding the potency of established chemotherapeutic agents. Their mechanisms of action are diverse, targeting key signaling pathways involved in cell proliferation, survival, and apoptosis. This guide provides an objective comparison of the performance of various pyrazole derivatives against other anticancer alternatives, supported by experimental data, detailed protocols, and visualizations of the underlying molecular pathways.

Comparative Anticancer Activity: In Vitro Studies

The following tables summarize the half-maximal inhibitory concentration (IC50) values for selected pyrazole derivatives against various human cancer cell lines. The IC50 value represents the concentration of a drug that is required for 50% inhibition in vitro. A lower IC50

© 2026 BenchChem. All rights reserved.

value is indicative of a higher potency. For comparative purposes, data for standard chemotherapeutic agents are also included.

Table 1: Comparative IC50 Values (μM) of Pyrazole Derivatives and Standard Anticancer Drugs against Various Cancer Cell Lines

© 2026 BenchChem. All rights reserved.

Compound/Drug	Target(s)	MCF-7 (Breast)	A549 (Lung)	HCT-116 (Colon)	HepG2 (Liver)	Reference
Pyrazole Derivatives						
Celecoxib	COX-2	25.2 - 37.2	-	~37	~28	[1]
Sorafenib	RAF, VEGFR, PDGFR	-	-	-	4.5	[1]
AT7519	CDKs	~0.3	~0.2	0.04 - 0.94	-	[1]
Compound 6g	EGFR	-	1.537	-	-	[2]
Compound 14a	Bcl2	1.7 (µg/ml)	-	-	-	[3]
Compound 3f	ROS Induction	14.97 (MDA-MB-468)	-	-	-	[4][5]
Tosind	Apoptosis Induction	-	-	30	-	[6]
Standard Anticancer Drugs						
Doxorubicin	Topoisomerase II, DNA intercalation	26.1 (µg/ml)	2.43	3.676 (µg/ml)	21.6 (µg/ml)	[3][7][8]
Gefitinib	EGFR	-	-	-	-	[9][10]
Paclitaxel	Tubulin	49.90 (MDA-MB-468)	-	-	-	[4][5]

© 2026 BenchChem. All rights reserved.

Note: Direct comparison of IC50 values should be made with caution as experimental conditions can vary between studies.

Experimental Protocols

The validation of the anticancer activity of pyrazole derivatives relies on a suite of standardized in vitro assays. Below are detailed methodologies for key experiments cited in this guide.

MTT Assay for Cell Viability

This colorimetric assay is a widely used method to assess cell metabolic activity, which serves as an indicator of cell viability, proliferation, and cytotoxicity.[11][12]

- Principle: Metabolically active cells possess NAD(P)H-dependent oxidoreductase enzymes that reduce the yellow tetrazolium salt, 3-(4,5-dimethylthiazol-2-yl)-2,5-diphenyltetrazolium bromide (MTT), to insoluble purple formazan crystals.[11] The amount of formazan produced is directly proportional to the number of viable cells.

- Procedure:

  - Cell Seeding: Plate cells in a 96-well plate at a density of 5 × 104 cells/well and incubate for 24 hours to allow for cell attachment.[11]

  - Compound Treatment: Treat the cells with various concentrations of the pyrazole derivative or control drug and incubate for a specified period (e.g., 24, 48, or 72 hours).

  - MTT Addition: After the incubation period, add 10 µL of MTT solution (5 mg/mL in PBS) to each well and incubate for 4 hours at 37°C.[11]

  - Formazan Solubilization: Carefully remove the medium and add 100 µL of a solubilization solution (e.g., DMSO or a solution of 10% SDS in 0.01 M HCl) to each well to dissolve the formazan crystals.[11]

  - Absorbance Measurement: Measure the absorbance of the wells at a wavelength of 570 nm using a microplate reader. The reference wavelength is typically set at 630 nm.

© 2026 BenchChem. All rights reserved.

Annexin V-FITC/Propidium Iodide (PI) Assay for Apoptosis

This flow cytometry-based assay is used to differentiate between viable, early apoptotic, late apoptotic, and necrotic cells.

- Principle: In the early stages of apoptosis, phosphatidylserine (PS) is translocated from the inner to the outer leaflet of the plasma membrane. Annexin V, a calcium-dependent phospholipid-binding protein, has a high affinity for PS and can be conjugated to a fluorochrome like FITC for detection. Propidium iodide (PI) is a fluorescent nucleic acid stain that cannot cross the membrane of live or early apoptotic cells, but it can stain the nucleus of late apoptotic and necrotic cells where the membrane integrity is compromised.

- Procedure:
  - Cell Treatment and Harvesting: Treat cells with the test compound for the desired duration. Harvest both adherent and floating cells and wash them with cold PBS.[13]
  - Cell Staining: Resuspend the cells in 1X Annexin V binding buffer. Add Annexin V-FITC and PI to the cell suspension and incubate for 15 minutes at room temperature in the dark. [13]
  - Flow Cytometry Analysis: Analyze the stained cells using a flow cytometer.
    - Viable cells: Annexin V-FITC negative and PI negative.
    - Early apoptotic cells: Annexin V-FITC positive and PI negative.
    - Late apoptotic/necrotic cells: Annexin V-FITC positive and PI positive.

Cell Cycle Analysis by Propidium Iodide (PI) Staining

This method utilizes flow cytometry to determine the distribution of cells in the different phases of the cell cycle (G0/G1, S, and G2/M).

- Principle: PI is a fluorescent intercalating agent that stains DNA. The amount of fluorescence emitted is directly proportional to the amount of DNA in the cell. Therefore, cells in the G2/M

© 2026 BenchChem. All rights reserved.

phase (with twice the DNA content) will have approximately twice the fluorescence intensity of cells in the G0/G1 phase. Cells in the S phase will have an intermediate fluorescence intensity.

- Procedure:
  - Cell Treatment and Harvesting: Treat cells with the pyrazole derivative for the desired time, then harvest and wash with PBS.
  - Cell Fixation: Fix the cells in ice-cold 70% ethanol while vortexing gently to prevent clumping. Cells can be stored at -20°C for several weeks.
  - Staining: Centrifuge the fixed cells to remove the ethanol and resuspend the pellet in a staining solution containing PI and RNase A (to degrade RNA and prevent its staining). Incubate in the dark at room temperature for at least 30 minutes.
  - Flow Cytometry Analysis: Analyze the DNA content of the cells by flow cytometry. The percentages of cells in the G0/G1, S, and G2/M phases are determined based on their fluorescence intensity.

Western Blot Analysis for Protein Expression

Western blotting is a technique used to detect and quantify specific proteins in a complex mixture, such as a cell lysate.

- Principle: Proteins are first separated by size using SDS-polyacrylamide gel electrophoresis (SDS-PAGE). The separated proteins are then transferred to a solid support membrane (e.g., PVDF or nitrocellulose). The membrane is then probed with a primary antibody specific to the target protein, followed by a secondary antibody conjugated to an enzyme (e.g., horseradish peroxidase) that catalyzes a chemiluminescent reaction for detection.
- Procedure:
  - Protein Extraction: Lyse treated and untreated cells in a suitable lysis buffer containing protease and phosphatase inhibitors. Determine the protein concentration of the lysates.
  - SDS-PAGE: Denature the protein samples and load equal amounts onto an SDS-polyacrylamide gel. Run the gel to separate the proteins by molecular weight.

© 2026 BenchChem. All rights reserved.

- Protein Transfer: Transfer the separated proteins from the gel to a PVDF or nitrocellulose membrane.
- Blocking: Block the membrane with a solution containing a non-specific protein (e.g., non-fat milk or bovine serum albumin) to prevent non-specific antibody binding.
- Antibody Incubation: Incubate the membrane with a primary antibody specific for the protein of interest, followed by incubation with an HRP-conjugated secondary antibody.
- Detection: Add a chemiluminescent substrate and detect the signal using an imaging system. The intensity of the bands corresponds to the amount of the target protein.

Signaling Pathways and Experimental Workflows

The anticancer effects of pyrazole derivatives are often attributed to their ability to modulate key signaling pathways that are dysregulated in cancer. The following diagrams, generated using Graphviz, illustrate some of these pathways and a typical experimental workflow for validating the anticancer activity of these compounds.

© 2026 BenchChem. All rights reserved.

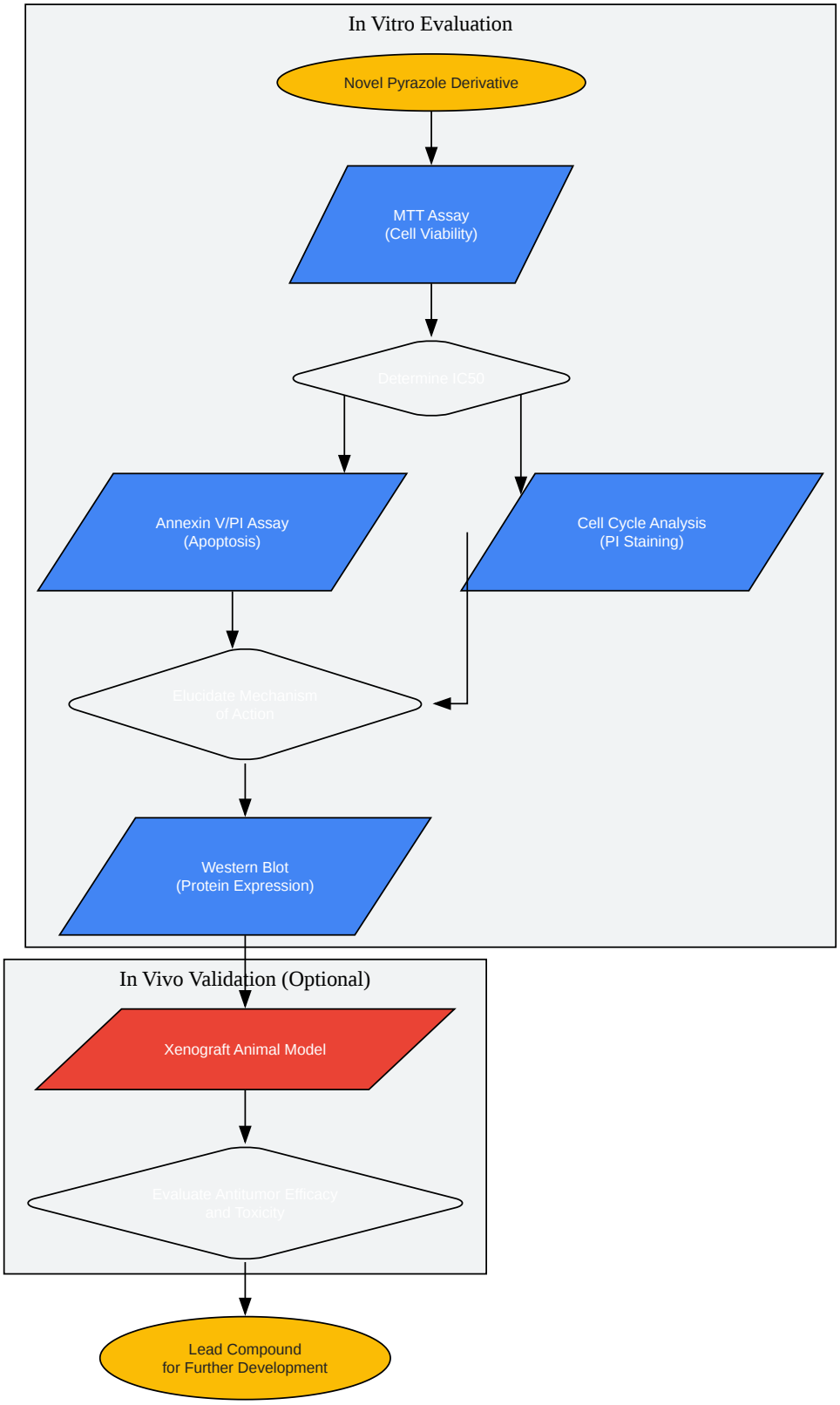

Click to download full resolution via product page

Caption: Experimental workflow for validating anticancer activity.

© 2026 BenchChem. All rights reserved.

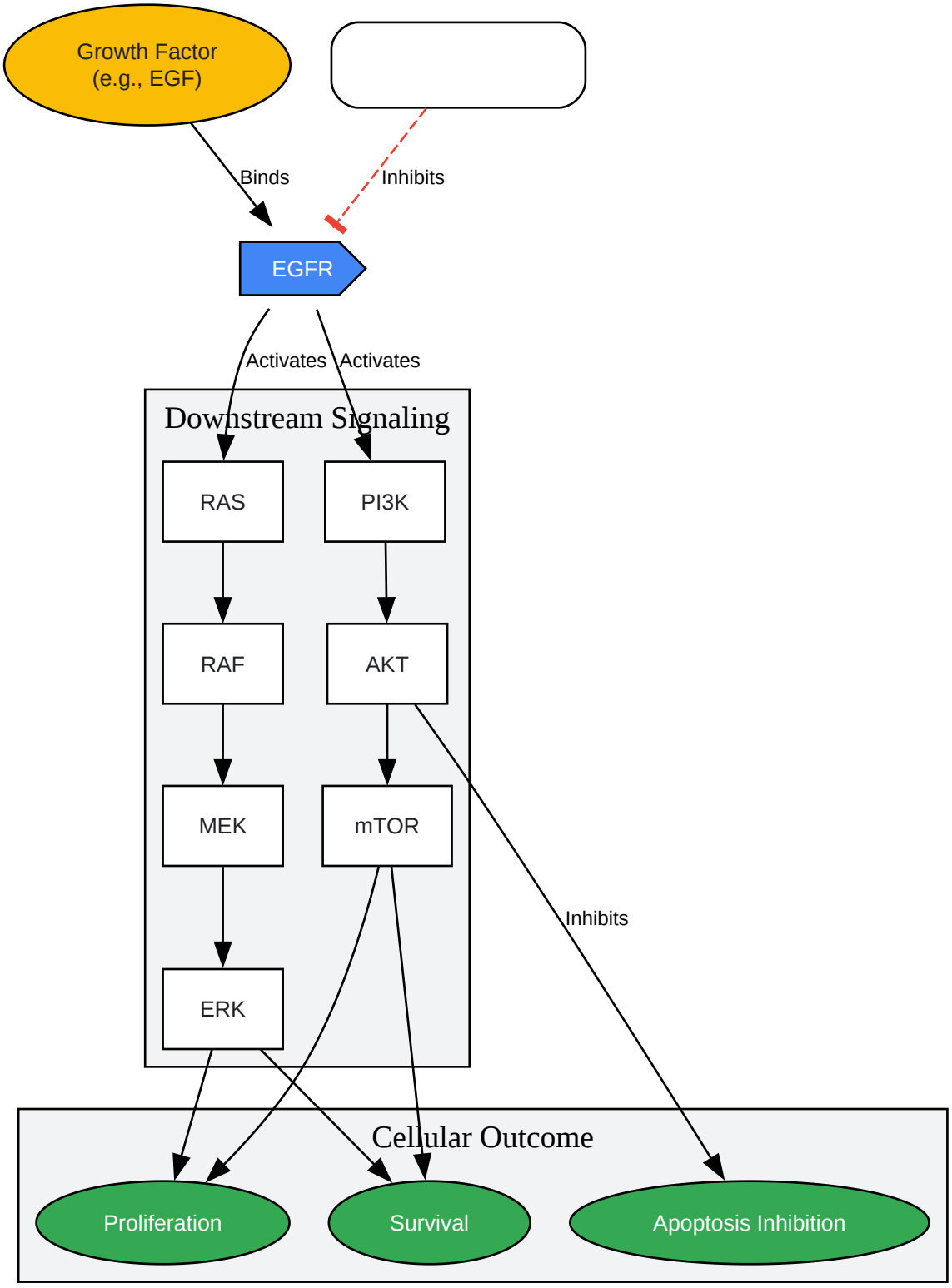

Click to download full resolution via product page

Caption: EGFR signaling pathway and its inhibition by pyrazole derivatives.

© 2026 BenchChem. All rights reserved.

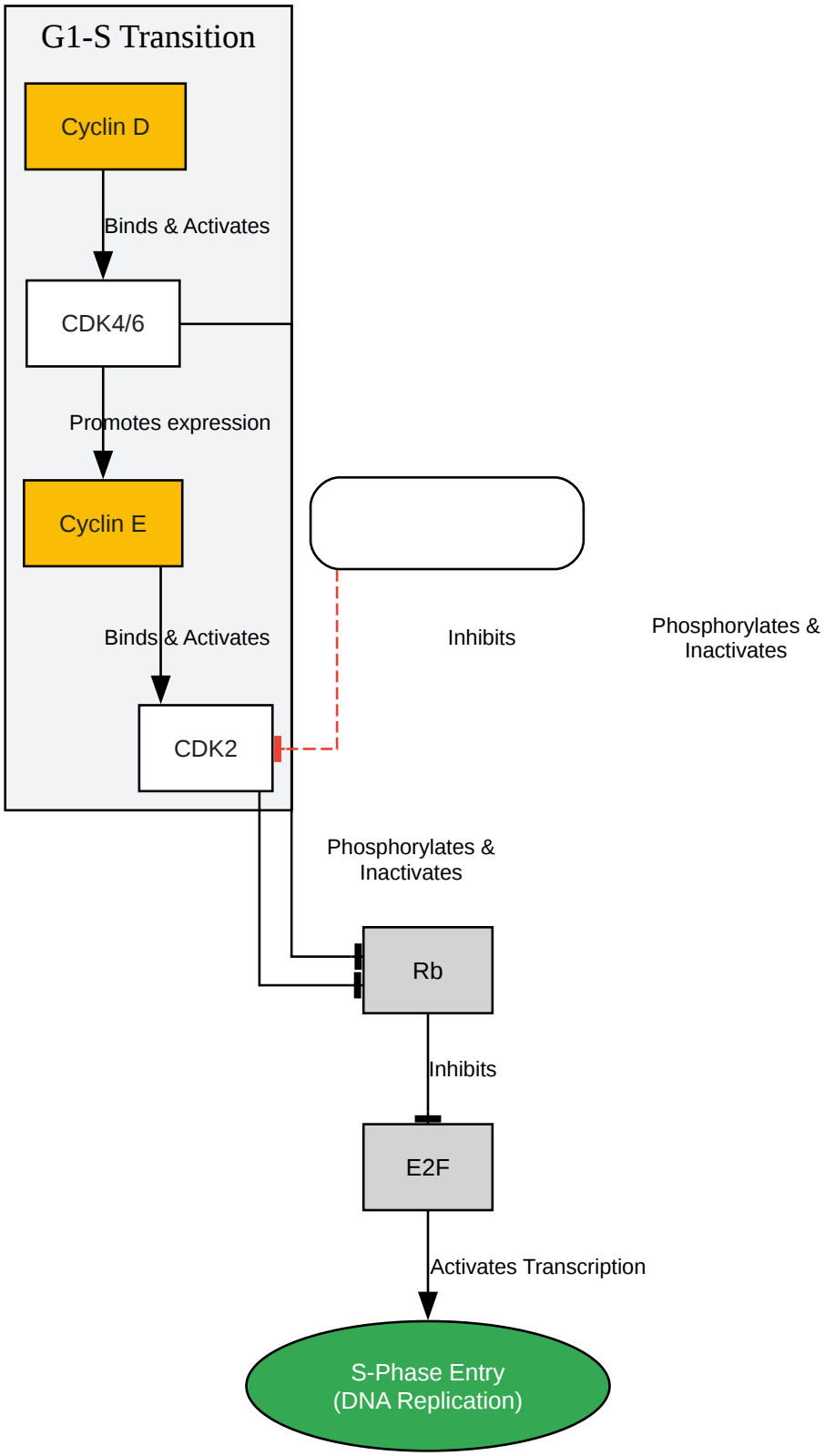

Click to download full resolution via product page

Caption: Cell cycle regulation by CDK2 and its inhibition.

© 2026 BenchChem. All rights reserved.

In conclusion, pyrazole derivatives represent a promising class of anticancer agents with diverse mechanisms of action and potent cytotoxic effects against a wide range of cancer cell lines. The data and protocols presented in this guide offer a valuable resource for researchers in the field of oncology and drug discovery, facilitating the objective comparison and further investigation of these compounds as potential cancer therapeutics.

Need Custom Synthesis?

BenchChem offers custom synthesis for rare earth carbides and specific isotopiclabeling.

Email: info@benchchem.com or Request Quote Online.

References

- 1. Gefitinib - Wikipedia [en.wikipedia.org]
- 2. pubs.acs.org [pubs.acs.org]
- 3. Design, synthesis, in vitro anticancer, molecular docking and SAR studies of new series of pyrrolo[2,3-d]pyrimidine derivatives - PMC [pmc.ncbi.nlm.nih.gov]
- 4. Pyrazole Derivatives Induce Apoptosis via ROS Generation in the Triple Negative Breast Cancer Cells, MDA-MB-468 - PMC [pmc.ncbi.nlm.nih.gov]
- 5. Pyrazole Derivatives Induce Apoptosis via ROS Generation in the Triple Negative Breast Cancer Cells, MDA-MB-468 [journal.waocp.org]
- 6. jpp.krakow.pl [jpp.krakow.pl]
- 7. researchgate.net [researchgate.net]
- 8. researchgate.net [researchgate.net]
- 9. What is the mechanism of Gefitinib? [synapse.patsnap.com]
- 10. Gefitinib: mechanism of action, pharmacokinetics and side effect_Chemicalbook [chemicalbook.com]
- 11. mdpi.com [mdpi.com]
- 12. Eco-friendly synthesis of novel pyrazole derivatives and their anticancer and CDK2 inhibitory activities - PMC [pmc.ncbi.nlm.nih.gov]
- 13. Identification of a Potent Cytotoxic Pyrazole with Anti-Breast Cancer Activity That Alters Multiple Pathways - PMC [pmc.ncbi.nlm.nih.gov]

© 2026 BenchChem. All rights reserved.

- To cite this document: BenchChem. [A Comparative Guide to the Anticancer Potential of Pyrazole Derivatives]. BenchChem, [2026]. [Online PDF]. Available at: [https://www.benchchem.com/product/b168347/docs#a-comparative-guide-to-the-anticancer-potential-of-pyrazole-derivatives]

Disclaimer & Data Validity:

The information provided in this document is for Research Use Only (RUO) and is strictly not intended for diagnostic or therapeutic procedures. While BenchChem strives to provide accurate protocols, we make no warranties, express or implied, regarding the fitness of this product for every specific experimental setup.

Technical Support: The protocols provided are for reference purposes. Unsure if this reagent suits your experiment?

Need Industrial/Bulk Grade? Request Custom Synthesis Quote

BenchChem

Our mission is to be the trusted global source of essential and advanced chemicals, empowering scientists and researchers to drive progress in science and industry.

Contact

Address: 3281 E Guasti Rd

Ontario, CA 91761, United States

Phone: (601) 213-4426

Email: info@benchchem.com

Contact our Ph.D. Support Team for a compatibility check