A Comparative In Vitro Analysis of Pergolide Mesylate and Bromocriptine

Author: BenchChem Technical Support Team. **Date**: April 2026

Compound of Interest

Compound Name:	*Pergolide Mesylate*
CAS No.:	*66104-23-2*
Cat. No.:	*B1679604*

Get Quote

For Researchers, Scientists, and Drug Development Professionals

This guide provides an objective in vitro comparison of two key dopamine agonists, **Pergolide Mesylate** and Bromocriptine. Both are ergoline derivatives historically used in the management of Parkinson's disease and hyperprolactinemia. Their primary mechanism of action involves the stimulation of dopamine receptors, but their in vitro pharmacological profiles exhibit notable differences in receptor affinity, selectivity, and functional activity. This analysis is supported by experimental data to assist researchers in selecting the appropriate compound for their specific investigative needs.

Receptor Binding Affinity

The binding affinity of a ligand for its receptor is a critical determinant of its potency and potential selectivity. The dissociation constant (Ki) is a measure of this affinity, with lower values indicating a higher affinity. The following table summarizes the reported Ki values for Pergolide and Bromocriptine at human dopamine D1, D2, and D3 receptors.

© 2026 BenchChem. All rights reserved.

Compound	D1 Ki (nM)	D2 Ki (nM)	D3 Ki (nM)	D1/D2 Selectivity Ratio	D3/D2 Selectivity Ratio	Source
Pergolide	447	2.9 (calculated)	0.86	67	1	
Bromocriptine	354 (calculated)	5.9	31.86 (calculated)	60	5.4	

Note: Some values were calculated based on the reported Ki(D1)/Ki(D2) and Ki(D3)/Ki(D2) ratios from the same study to ensure internal consistency. A higher D1/D2 selectivity ratio indicates greater selectivity for the D2 receptor over the D1 receptor.

From this data, it is evident that both Pergolide and Bromocriptine exhibit a higher affinity for the D2 receptor compared to the D1 receptor. Pergolide, however, demonstrates a notably higher affinity for the D3 receptor subtype compared to Bromocriptine. While both are potent D2 agonists, Pergolide's profile suggests a broader spectrum of activity across the D2-like receptor family.

Functional Activity

Functional assays measure the biological response elicited by a ligand upon binding to its receptor. For dopamine agonists, a key measure is their effect on the production of cyclic AMP (cAMP), a crucial second messenger. D1-like receptors (D1 and D5) are typically coupled to Gs proteins, which stimulate adenylyl cyclase to increase cAMP levels. Conversely, D2-like receptors (D2, D3, and D4) are coupled to Gi/o proteins, which inhibit adenylyl cyclase and reduce cAMP levels.

© 2026 BenchChem. All rights reserved.

Compound	Receptor Target	Functional Assay	Potency (EC50)	Efficacy	Source
Pergolide	D2S	cAMP Inhibition	5x lower potency than Bromocriptine	Full Agonist	
Bromocriptine	D2S	cAMP Inhibition	~5x higher potency than Pergolide	Full Agonist	
Pergolide	D1	cAMP Stimulation	Data not available	Agonist	
Bromocriptine	D1	cAMP Modulation	Data not available	Antagonist/Weak Partial Agonist	

In functional assays, both Pergolide and Bromocriptine act as full agonists at the D2S receptor, leading to the inhibition of cAMP production. Notably, Bromocriptine demonstrated approximately five-fold greater potency (lower EC50) than Pergolide in this specific assay. A significant point of differentiation is their activity at the D1 receptor. Pergolide is recognized as a D1 receptor agonist, capable of stimulating cAMP production, whereas Bromocriptine is generally considered to be a D1 antagonist or a very weak partial agonist.

Signaling Pathways and Mechanisms

The differential effects of Pergolide and Bromocriptine can be understood by visualizing their interaction with the D1 and D2 receptor signaling cascades.

© 2026 BenchChem. All rights reserved.

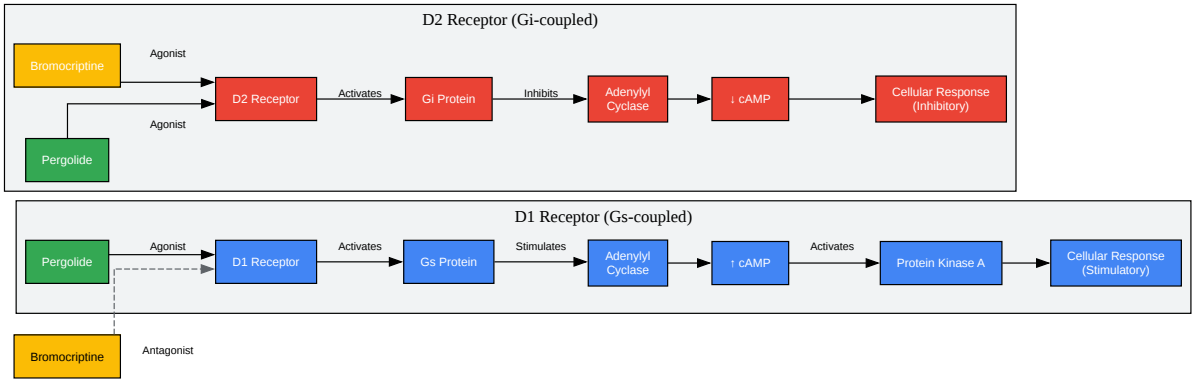

© 2026 BenchChem. All rights reserved.

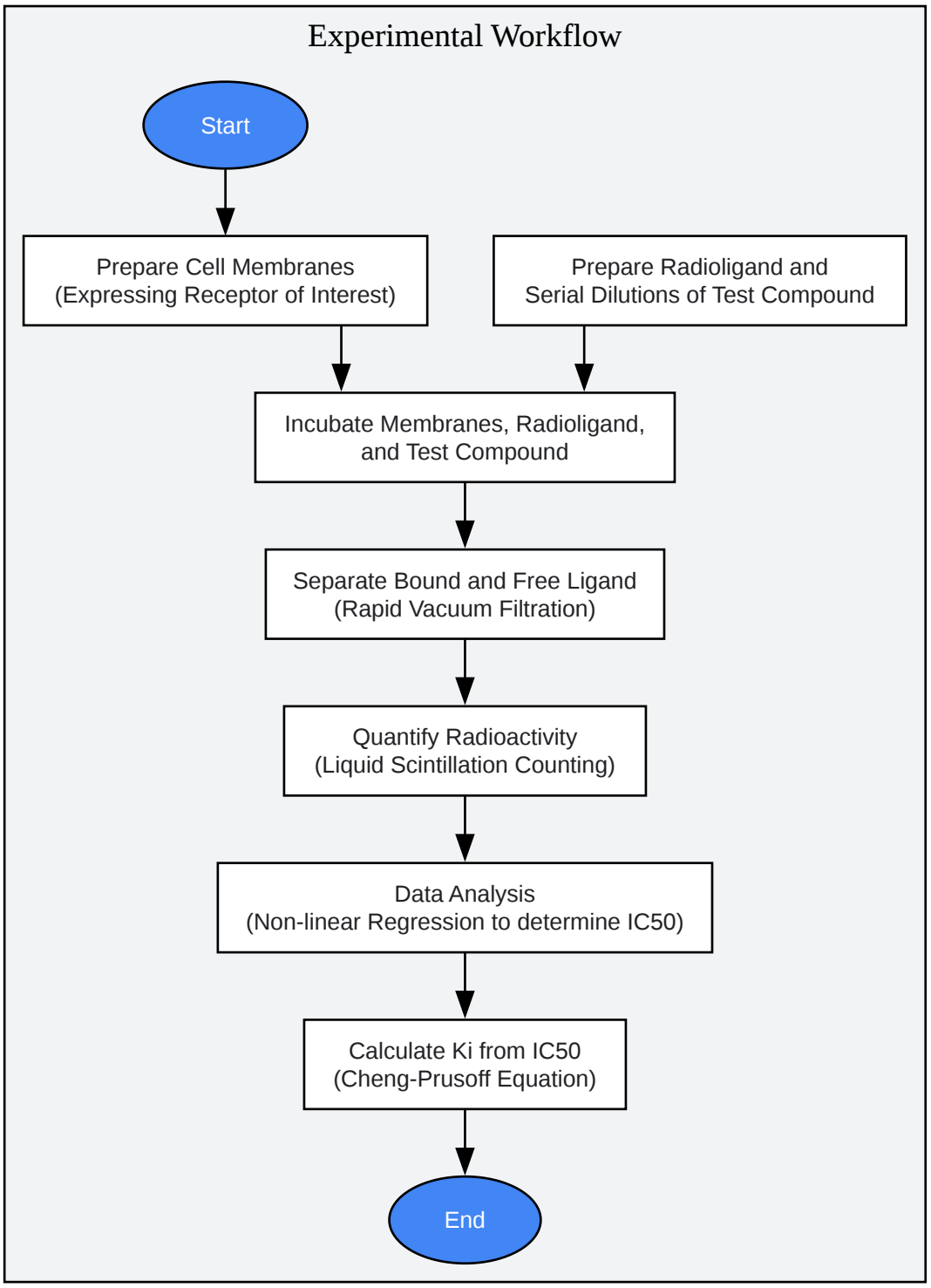

© 2026 BenchChem. All rights reserved.

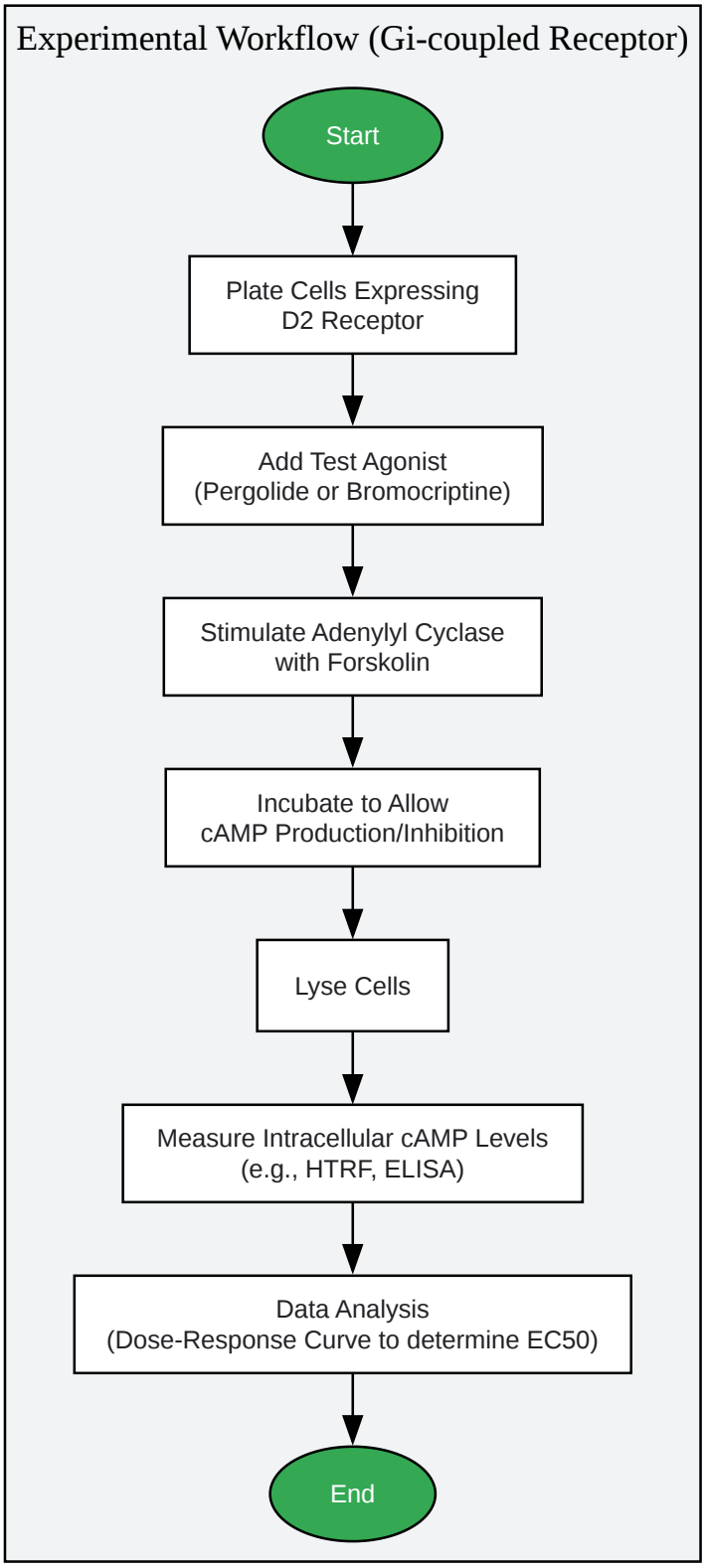

© 2026 BenchChem. All rights reserved.

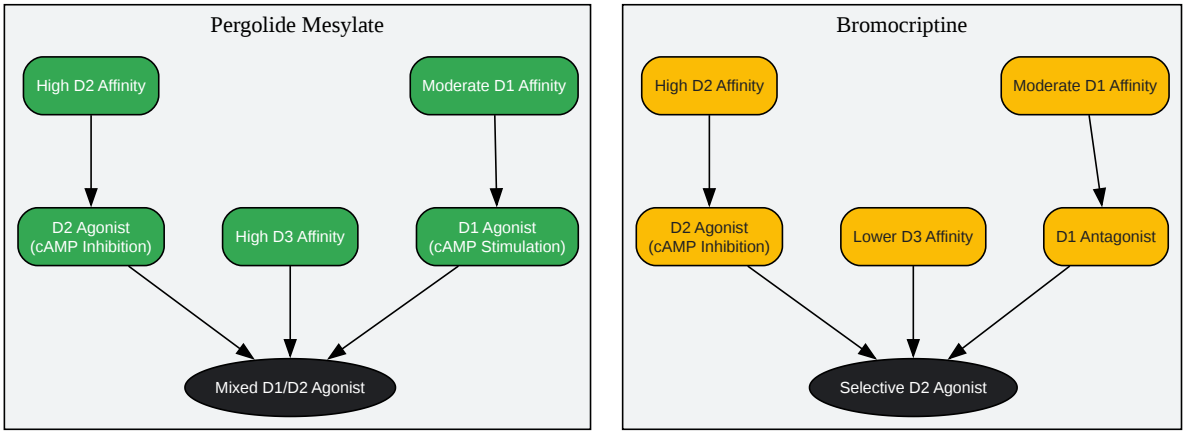

Click to download full resolution via product page

- To cite this document: BenchChem. [A Comparative In Vitro Analysis of Pergolide Mesylate and Bromocriptine]. BenchChem, [2026]. [Online PDF]. Available at: [https://www.benchchem.com/product/b1679604/docs#a-comparative-in-vitro-analysis-of-pergolide-mesylate-and-bromocriptine]

Disclaimer & Data Validity:

The information provided in this document is for Research Use Only (RUO) and is strictly not intended for diagnostic or therapeutic procedures. While BenchChem strives to provide accurate protocols, we make no warranties, express or implied, regarding the fitness of this product for every specific experimental setup.

Technical Support: The protocols provided are for reference purposes. Unsure if this reagent suits your experiment?

Need Industrial/Bulk Grade? Request Custom Synthesis Quote

© 2026 BenchChem. All rights reserved.

BenchChem

Our mission is to be the trusted global source of essential and advanced chemicals, empowering scientists and researchers to drive progress in science and industry.

Contact

Address: 3281 E Guasti Rd

Ontario, CA 91761, United States

Phone: (601) 213-4426

Email: info@benchchem.com

Contact our Ph.D. Support Team for a compatibility check

© 2026 BenchChem. All rights reserved.