Reducing non-specific binding of NIDA-41020

Author: BenchChem Technical Support Team. **Date**: April 2026

Compound of Interest	
Compound Name:	*NIDA-41020*
CAS No.:	*502486-89-7*
Cat. No.:	*B1678766*

Get Quote

Technical Support Center: NIDA-41020

This technical support center provides researchers, scientists, and drug development professionals with comprehensive troubleshooting guides and frequently asked questions (FAQs) to address the common challenge of non-specific binding during experiments with the novel FAAH inhibitor, **NIDA-41020**.

Troubleshooting Guide: Reducing Non-Specific Binding of NIDA-41020

High non-specific binding (NSB) can obscure specific signals, leading to inaccurate data in various assays, including radioligand binding and enzyme activity assays. The following guide provides a systematic approach to identifying and mitigating common causes of high NSB for **NIDA-41020**.

Issue: High Background Signal Obscuring Specific Binding

High background is a frequent indicator of significant non-specific binding. This can be caused by the compound adhering to surfaces other than the target enzyme, such as assay plates, filters, or other proteins.[1]

© 2026 BenchChem. All rights reserved.

Potential Cause	Troubleshooting Steps	Expected Outcome
Suboptimal Blocking	Inadequate blocking of non-target sites is a primary cause of high NSB.[1] 1. Optimize Blocking Agent: Use an appropriate blocking agent like Bovine Serum Albumin (BSA). A typical starting concentration is 1% in the assay buffer.[1] 2. Increase Incubation Time: Extend the blocking incubation period to ensure complete saturation of non-specific sites.[2] 3. Vary Blocking Reagent: If BSA is ineffective, consider trying other blocking agents such as non-fat dry milk or casein, depending on the assay system.	A significant reduction in background signal, improving the signal-to-noise ratio.
Inappropriate Assay Buffer Conditions	The pH and ionic strength of the assay buffer can influence non-specific interactions.[1] 1. Adjust pH: Empirically test a range of pH values around the physiological optimum (typically pH 7.4) to find the condition that minimizes NSB. 2. Modify Ionic Strength: Increase the salt concentration (e.g., NaCl) in the buffer to disrupt electrostatic interactions that can contribute to non-specific binding.[3]	Identification of buffer conditions that favor specific binding over non-specific interactions.
Issues with the Radioligand or Compound	The physical properties of NIDA-41020 or the radioligand used can lead to aggregation	Minimized compound aggregation and reduced

© 2026 BenchChem. All rights reserved.

	or sticking. 1. Include Detergents: Add a non-ionic detergent, such as Tween-20 (typically at 0.05-0.1%), to the assay and wash buffers to reduce hydrophobic interactions.[4] 2. Check Compound Integrity: Ensure the stock solution of NIDA-41020 is properly solubilized and has not precipitated.	binding to plasticware and other surfaces.
Insufficient Washing	Inadequate removal of unbound NIDA-41020 or radioligand will result in high background. 1. Increase Wash Steps: Increase the number and volume of washes after the incubation step.[5] 2. Use Cold Wash Buffer: Perform washes with ice-cold buffer to minimize the dissociation of specifically bound ligand while removing non-specifically bound compound.[5]	More efficient removal of unbound compound, leading to a lower background signal.

© 2026 BenchChem. All rights reserved.

Filter Binding (for filtration assays)	The type of filter material can contribute to non-specific binding. 1. Test Different Filter Types: If using a filtration assay, test different filter materials (e.g., glass fiber, polyethyleneimine-treated) to identify one with low affinity for NIDA-41020. 2. Pre-treat Filters: Pre-soaking filters in the assay buffer containing a blocking agent can help to reduce non-specific binding.	Selection of a filter that minimizes compound adherence and improves assay accuracy.

Frequently Asked Questions (FAQs)

Q1: What is non-specific binding and why is it a problem?

A1: Non-specific binding refers to the interaction of a compound, such as **NIDA-41020**, with molecules or surfaces other than its intended biological target (in this case, FAAH).[6] This is problematic because it can create a high background signal that masks the true specific binding, leading to inaccurate measurements of the compound's affinity and efficacy.[1]

Q2: How is non-specific binding determined in an experiment?

A2: Non-specific binding is typically measured by incubating the assay system with the labeled compound (e.g., radiolabeled **NIDA-41020**) in the presence of a high concentration of an unlabeled competitor that binds to the same target.[7][8] This competitor displaces the specific binding of the labeled compound, so any remaining signal is considered non-specific.

Q3: What is an acceptable level of non-specific binding?

A3: Ideally, non-specific binding should be less than 50% of the total binding, and for high-quality data, it is often recommended to be in the range of 10-20% of the total binding.[7][9] If non-specific binding is too high, it becomes difficult to obtain reliable and reproducible results.[7]

© 2026 BenchChem. All rights reserved.

Q4: Can the concentration of the receptor preparation affect non-specific binding?

A4: Yes, using too high a concentration of the receptor preparation (e.g., cell membranes or tissue homogenates) can increase non-specific binding. It is recommended to use the lowest concentration of the receptor preparation that still provides a robust specific binding signal.[5]

Q5: Could the secondary antibody be the source of non-specific binding in an immunoassay-based detection system?

A5: Absolutely. The secondary antibody can bind non-specifically to components in the sample. To troubleshoot this, run a control without the primary antibody. If staining or signal is still observed, the secondary antibody is likely binding non-specifically.[2] Consider using a pre-adsorbed secondary antibody or changing the blocking agent to a serum from the same species as the secondary antibody host.[2]

Experimental Protocols

Protocol: Standard Radioligand Binding Assay for FAAH

This protocol provides a general framework for a competitive binding assay to determine the affinity of **NIDA-41020** for the FAAH enzyme.

Materials:

- Assay Buffer: 50 mM Tris-HCl, pH 7.4, containing 1 mM EDTA and 0.1% BSA.[1]
- Radioligand: A suitable radiolabeled FAAH substrate or inhibitor (e.g., [^{3}H]-Anandamide).
- Unlabeled Competitor (for NSB determination): A known FAAH inhibitor at a high concentration (e.g., 10 µM URB597).
- FAAH Enzyme Source: Homogenates or membranes from cells or tissues expressing FAAH.
- **NIDA-41020**: Stock solution of known concentration.
- Wash Buffer: Ice-cold 50 mM Tris-HCl, pH 7.4.
- Scintillation Fluid and Vials.

© 2026 BenchChem. All rights reserved.

- Glass Fiber Filters.
- Filtration Apparatus.

Procedure:

- Prepare Reagents: Dilute **NIDA-41020**, the radioligand, and the unlabeled competitor to the desired concentrations in the assay buffer.
- Assay Setup:
  - Total Binding: To designated tubes, add assay buffer, the radioligand at a concentration near its Kd, and the FAAH enzyme preparation.
  - Non-Specific Binding: To another set of tubes, add the unlabeled competitor, the radioligand, and the FAAH enzyme preparation.
  - Competitive Binding: To additional sets of tubes, add varying concentrations of **NIDA-41020**, the radioligand, and the FAAH enzyme preparation.
- Incubation: Incubate all tubes at a controlled temperature (e.g., 30°C) for a predetermined time to reach equilibrium.
- Termination of Binding: Rapidly filter the contents of each tube through a glass fiber filter using a filtration apparatus.
- Washing: Wash the filters multiple times with ice-cold wash buffer to remove unbound radioligand.
- Quantification: Place the filters in scintillation vials, add scintillation fluid, and measure the radioactivity using a scintillation counter.
- Data Analysis:
  - Calculate Specific Binding = Total Binding - Non-Specific Binding.
  - Plot the percentage of specific binding against the log concentration of **NIDA-41020** to determine the IC50 value.

© 2026 BenchChem. All rights reserved.

Visualizations

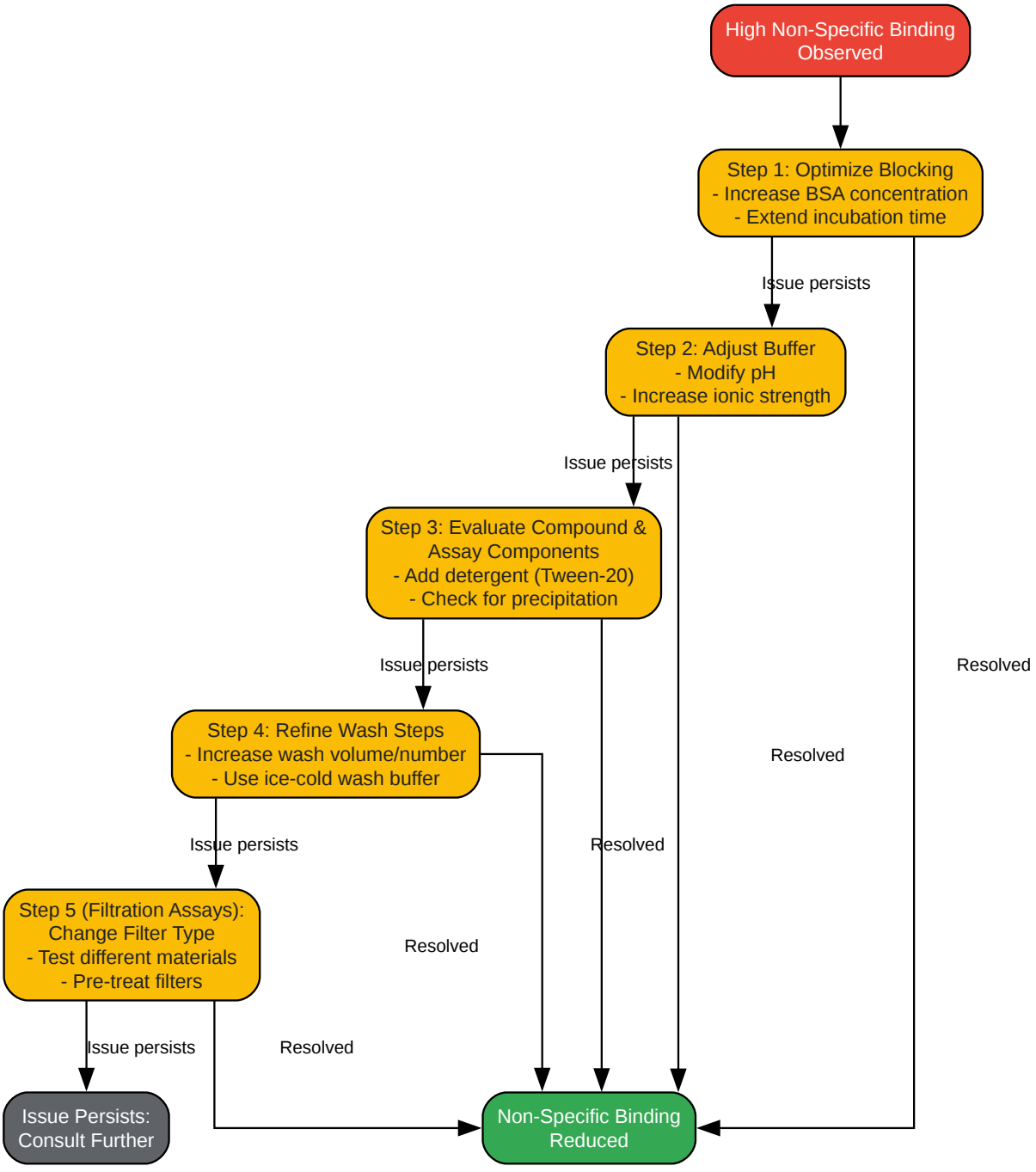

Click to download full resolution via product page

© 2026 BenchChem. All rights reserved.

Caption: A step-by-step workflow for troubleshooting high non-specific binding.

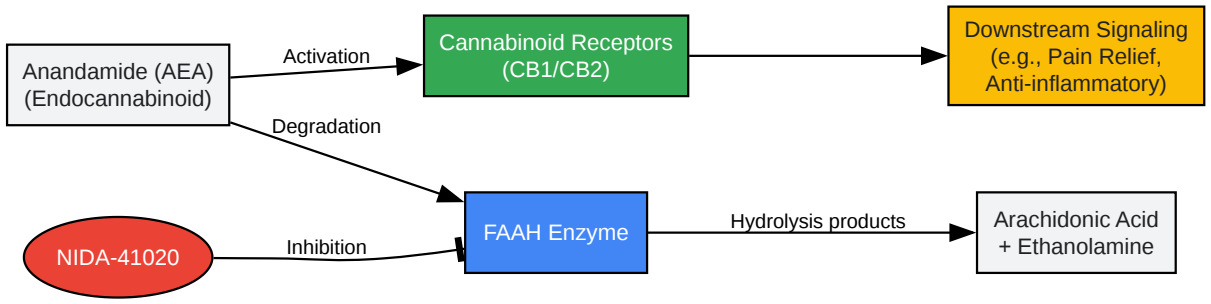

Click to download full resolution via product page

Caption: Simplified signaling pathway showing FAAH inhibition by **NIDA-41020**.

© 2026 BenchChem. All rights reserved.

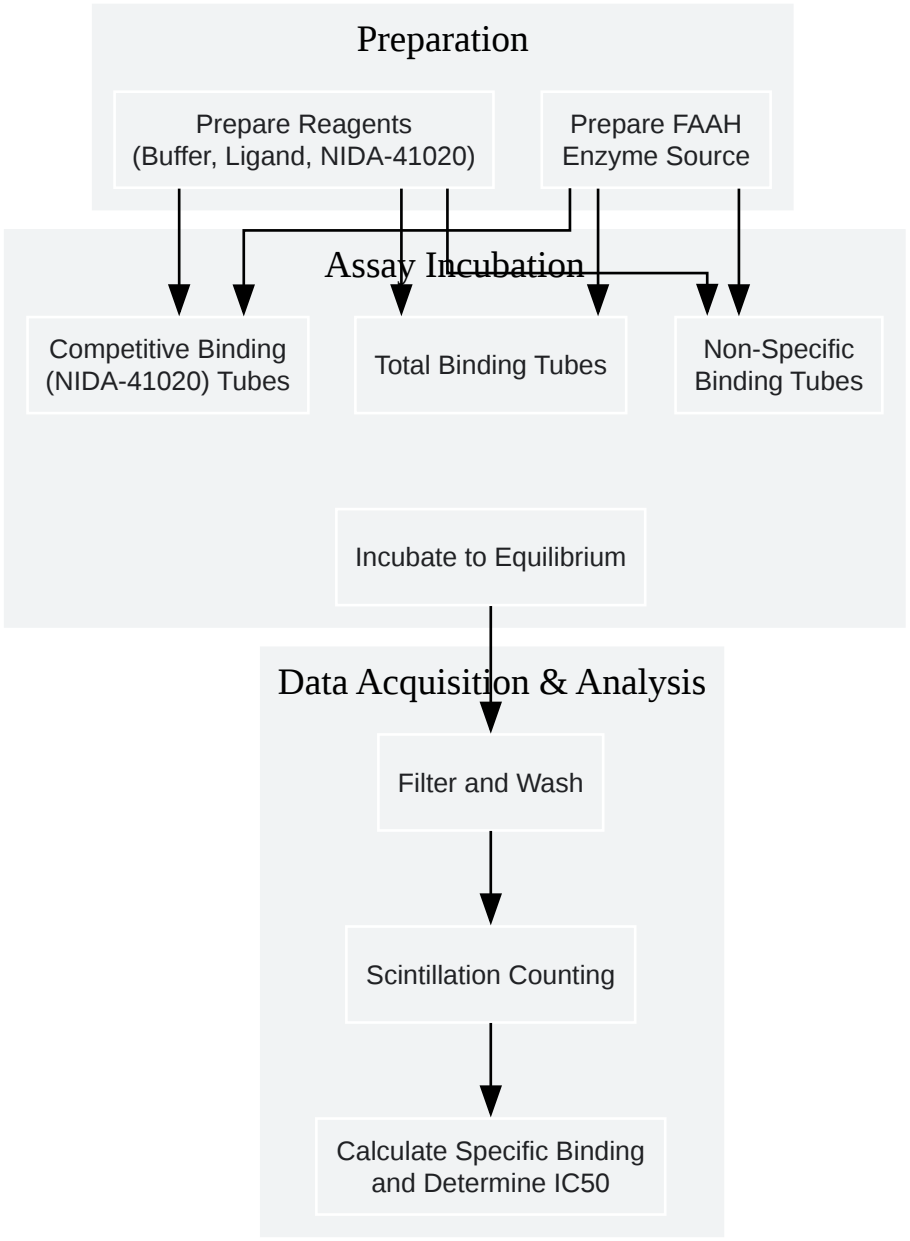

Click to download full resolution via product page

Caption: Workflow for a competitive radioligand binding assay with **NIDA-41020**.

Need Custom Synthesis?

BenchChem offers custom synthesis for rare earth carbides and specific isotopiclabeling.

Email: info@benchchem.com or Request Quote Online.

References

- 1. benchchem.com [benchchem.com]
- 2. bosterbio.com [bosterbio.com]
- 3. nicoyalife.com [nicoyalife.com]
- 4. Ultimate IHC Troubleshooting Guide: Fix Weak Staining & High Background [atlasantibodies.com]
- 5. benchchem.com [benchchem.com]
- 6. Surmodics - Non-Specific Binding: What You Need to Know [shop.surmodics.com]
- 7. graphpad.com [graphpad.com]
- 8. chem.uwec.edu [chem.uwec.edu]
- 9. Receptor Binding Assays for HTS and Drug Discovery - Assay Guidance Manual - NCBI Bookshelf [ncbi.nlm.nih.gov]

- To cite this document: BenchChem. [Reducing non-specific binding of NIDA-41020]. BenchChem, [2026]. [Online PDF]. Available at: [https://www.benchchem.com/product/b1678766/docs#reducing-non-specific-binding-of-nida-41020]

Disclaimer & Data Validity:

The information provided in this document is for Research Use Only (RUO) and is strictly not intended for diagnostic or therapeutic procedures. While BenchChem strives to provide accurate protocols, we make no warranties, express or implied, regarding the fitness of this product for every specific experimental setup.

Technical Support: The protocols provided are for reference purposes. Unsure if this reagent suits your experiment?

Need Industrial/Bulk Grade? Request Custom Synthesis Quote

© 2026 BenchChem. All rights reserved.

BenchChem

Our mission is to be the trusted global source of essential and advanced chemicals, empowering scientists and researchers to drive progress in science and industry.

Contact

Address: 3281 E Guasti Rd

Ontario, CA 91761, United States

Phone: (601) 213-4426

Email: info@benchchem.com

Contact our Ph.D. Support Team for a compatibility check

© 2026 BenchChem. All rights reserved.