Comparative Guide: Synergistic Potential of MK-4965 with Nucleoside Reverse Transcriptase Inhibitors

Author: BenchChem Technical Support Team. **Date**: April 2026

Compound of Interest

Compound Name:	*MK-4965*
CAS No.:	*920035-77-4*
Cat. No.:	*B1676623*

Get Quote

For Researchers, Scientists, and Drug Development Professionals

This guide provides a comparative analysis of the non-nucleoside reverse transcriptase inhibitor (NNRTI) **MK-4965** and its potential synergistic activity when combined with nucleoside reverse transcriptase inhibitors (NRTIs) for the treatment of HIV-1. While direct quantitative synergy data for **MK-4965** in combination with NRTIs is not publicly available, this document outlines the established non-antagonistic profile of **MK-4965** and presents representative synergistic data from other NNRTI-NRTI combinations to illustrate the expected therapeutic benefits.

Introduction to **MK-4965** and NRTIs

MK-4965 is a novel investigational NNRTI characterized by its diaryl ether and indazole components.[1][2] It has demonstrated potent antiviral activity against wild-type HIV-1 and, notably, against common NNRTI-resistant strains, such as those with K103N and Y181C mutations in the reverse transcriptase enzyme.[1][2][3] Its mechanism of action involves

© 2026 BenchChem. All rights reserved.

binding to a non-essential site on the HIV-1 reverse transcriptase, inducing a conformational change that inhibits its function.

NRTIs are a cornerstone of antiretroviral therapy. They act as chain terminators during the reverse transcription of viral RNA into DNA. After intracellular phosphorylation to their active triphosphate form, they are incorporated by the reverse transcriptase into the growing DNA chain, leading to the cessation of DNA elongation.

The combination of drugs with different mechanisms of action is a standard strategy in HIV-1 treatment to enhance efficacy, reduce drug dosages, and limit the emergence of drug-resistant viral strains. A study on **MK-4965** has shown that its antiviral activity is non-antagonistic when combined with 18 other FDA-approved antiretroviral drugs, which includes various NRTIs.[1][2][4] While "non-antagonistic" does not explicitly quantify synergy, it suggests that the combination is not detrimental and may be beneficial.

Synergistic Activity of NNRTIs and NRTIs

The combination of NNRTIs and NRTIs has been shown to produce synergistic effects in inhibiting HIV-1 replication.[5][6] This synergy is thought to arise from their distinct but complementary mechanisms of action targeting the same enzyme, the reverse transcriptase.

Quantitative Analysis of NNRTI-NRTI Synergy

While specific quantitative synergy data for **MK-4965** is unavailable in published literature, data from other NNRTIs, such as doravirine, in combination with NRTIs can serve as a representative example. The synergistic effect of drug combinations can be quantified using the Combination Index (CI), calculated using the Chou-Talalay method. A CI value less than 1 indicates synergy, a value equal to 1 indicates an additive effect, and a value greater than 1 indicates antagonism.

The following table presents data on the synergistic combination of novel NNRTIs with the NRTI azidothymidine (AZT) against a multi-drug resistant HIV-1 strain.

© 2026 BenchChem. All rights reserved.

NNRTI/AZT Combination	Combination Index (CI) Range	Fold-Dose Reduction (NNRTI)	Fold-Dose Reduction (AZT)	Level of Synergy
DAPA-2e / AZT	0.116 - 0.279	7 - 18	7 - 18	Strong Synergy
DAAN-14h / AZT	0.116 - 0.279	7 - 18	7 - 18	Strong Synergy
DAAN-15h / AZT	0.116 - 0.279	7 - 18	7 - 18	Strong Synergy

Data adapted from a study on novel NNRTIs combined with AZT against a multi-RTI-resistant HIV-1 strain.[5] DAPA-2e, DAAN-14h, and DAAN-15h are investigational NNRTIs.

Experimental Protocols

A detailed methodology for assessing the synergistic antiviral effects of drug combinations is crucial for reproducible and comparable results. The following is a representative experimental protocol for an in vitro HIV-1 drug combination synergy assay.

Protocol: In Vitro HIV-1 Drug Combination Synergy Assay

1. Cell Culture and Virus Stocks:

- MT-4 cells (a human T-cell leukemia line) are cultured in RPMI 1640 medium supplemented with 10% fetal bovine serum, 100 U/mL penicillin, and 100 µg/mL streptomycin.
- A laboratory-adapted strain of HIV-1 (e.g., HIV-1 IIIB) is propagated in MT-4 cells, and the virus stock is harvested and titrated to determine the 50% tissue culture infectious dose (TCID50).

2. Drug Preparation:

- **MK-4965** and the selected NRTI (e.g., zidovudine, lamivudine, or tenofovir) are dissolved in dimethyl sulfoxide (DMSO) to create stock solutions.
- Serial dilutions of each drug are prepared in the culture medium.

3. Synergy Assay (Checkerboard Method):

© 2026 BenchChem. All rights reserved.

- A 96-well microtiter plate is set up in a checkerboard format. Each well will contain a specific concentration of **MK-4965**, the NRTI, or a combination of both.
- MT-4 cells are infected with HIV-1 at a multiplicity of infection (MOI) of 0.01.
- The infected cells are then added to the wells of the pre-prepared drug dilution plate.
- The plate is incubated at 37°C in a 5% CO2 incubator for 4-5 days.

4. Measurement of Viral Replication:

- After the incubation period, the amount of HIV-1 p24 antigen in the cell culture supernatant is quantified using an enzyme-linked immunosorbent assay (ELISA). The p24 antigen level is a marker of viral replication.

5. Data Analysis:

- The 50% effective concentration (EC50) for each drug alone and for the combinations is calculated.
- The Combination Index (CI) is determined using the Chou-Talalay method with specialized software (e.g., CalcuSyn). The CI value provides a quantitative measure of the interaction between the two drugs (synergy, additivity, or antagonism).

Visualizations

Signaling Pathway: Inhibition of HIV-1 Reverse Transcription

© 2026 BenchChem. All rights reserved.

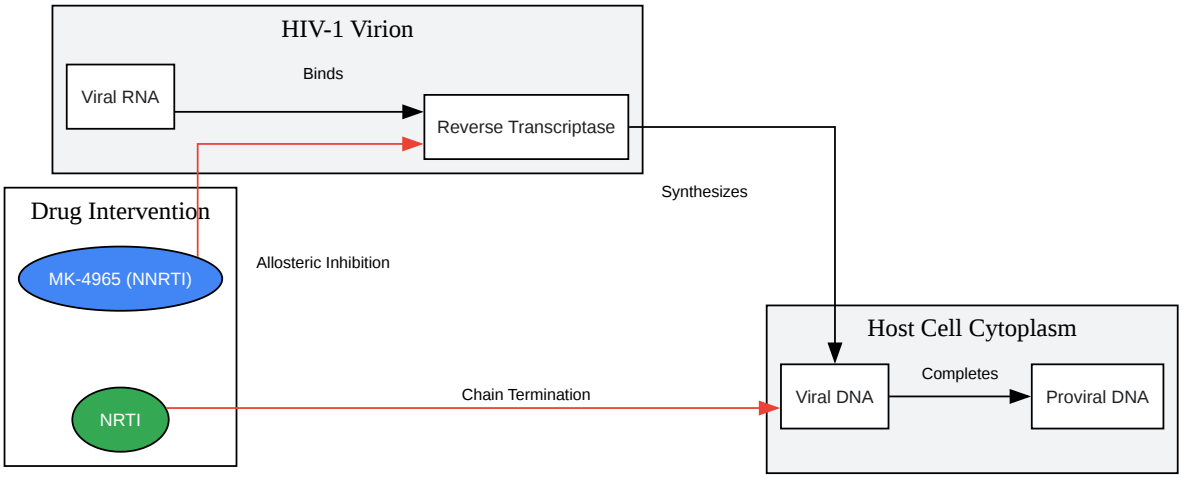

Click to download full resolution via product page

Caption: Mechanism of action of **MK-4965** and NRTIs on HIV-1 reverse transcription.

Experimental Workflow: Synergy Assessment

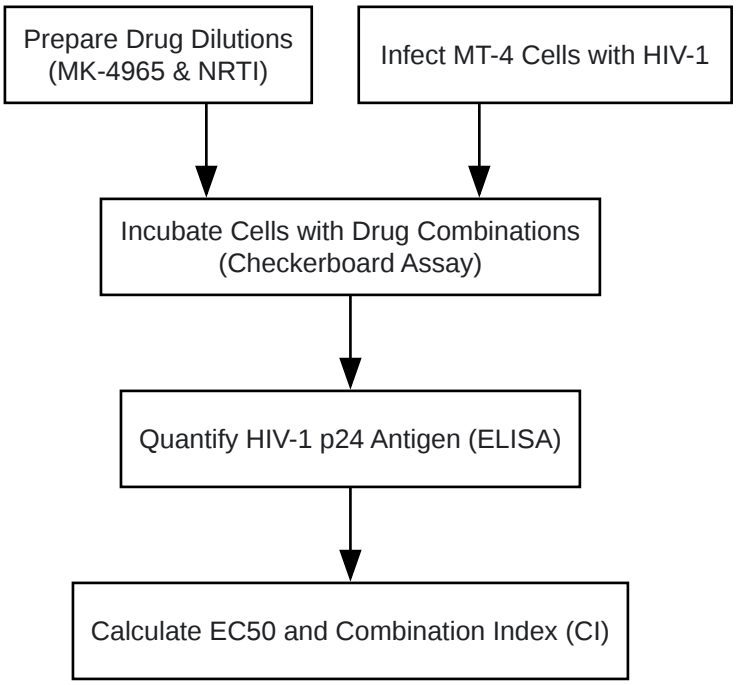

© 2026 BenchChem. All rights reserved.

Click to download full resolution via product page

Caption: Workflow for determining the in vitro synergy of antiviral drug combinations.

Logical Relationship: Rationale for Combination Therapy

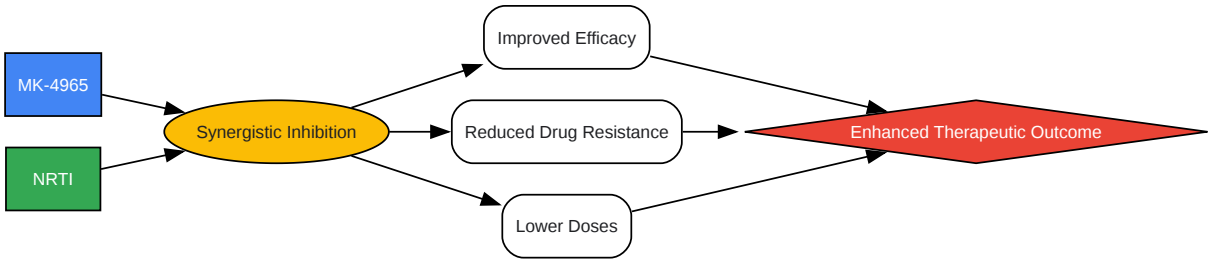

Click to download full resolution via product page

Caption: Rationale for combining **MK-4965** and NRTIs for an enhanced therapeutic outcome.

Need Custom Synthesis?

BenchChem offers custom synthesis for rare earth carbides and specific isotopiclabeling.

Email: info@benchchem.com or Request Quote Online.

References

- 1. researchgate.net [researchgate.net]
- 2. Emerging Reverse Transcriptase Inhibitors for HIV-1 Infection - PMC [pmc.ncbi.nlm.nih.gov]
- 3. Antiviral activity of MK-4965, a novel nonnucleoside reverse transcriptase inhibitor - PubMed [pubmed.ncbi.nlm.nih.gov]
- 4. journals.asm.org [journals.asm.org]
- 5. Combining New Non-Nucleoside Reverse Transcriptase Inhibitors (RTIs) with AZT Results in Strong Synergism against Multi-RTI-Resistant HIV-1 Strains - PMC [pmc.ncbi.nlm.nih.gov]

© 2026 BenchChem. All rights reserved.

- 6. mdpi.com [mdpi.com]
- To cite this document: BenchChem. [Comparative Guide: Synergistic Potential of MK-4965 with Nucleoside Reverse Transcriptase Inhibitors]. BenchChem, [2026]. [Online PDF]. Available at: [https://www.benchchem.com/product/b1676623/docs#comparative-guide-synergistic-potential-of-mk-4965-with-nucleoside-reverse-transcriptase-inhibitors]

Disclaimer & Data Validity:

The information provided in this document is for Research Use Only (RUO) and is strictly not intended for diagnostic or therapeutic procedures. While BenchChem strives to provide accurate protocols, we make no warranties, express or implied, regarding the fitness of this product for every specific experimental setup.

Technical Support: The protocols provided are for reference purposes. Unsure if this reagent suits your experiment?

Need Industrial/Bulk Grade? Request Custom Synthesis Quote

BenchChem

Our mission is to be the trusted global source of essential and advanced chemicals, empowering scientists and researchers to drive progress in science and industry.

Contact

Address: 3281 E Guasti Rd

Ontario, CA 91761, United States

Phone: (601) 213-4426

Email: info@benchchem.com

Contact our Ph.D. Support Team for a compatibility check

© 2026 BenchChem. All rights reserved.