Application Notes and Protocols for GAT229 in Cell Culture Experiments

Author: BenchChem Technical Support Team. **Date**: April 2026

Compound of Interest

Compound Name:	*GAT229*
Cat. No.:	*B1674638*

Get Quote

For Researchers, Scientists, and Drug Development Professionals

Introduction

GAT229 is a potent and selective positive allosteric modulator (PAM) of the Cannabinoid Receptor 1 (CB1). As a PAM, **GAT229** does not activate the CB1 receptor on its own but enhances the binding and/or efficacy of orthosteric agonists, such as the endogenous cannabinoids anandamide (AEA) and 2-arachidonoylglycerol (2-AG).[1][2] This mode of action offers a promising therapeutic strategy by fine-tuning the endocannabinoid system's activity, potentially avoiding the undesirable psychoactive effects associated with direct CB1 agonists.[3][4]

Research indicates that **GAT229** biases CB1 signaling towards the G-protein-mediated activation of the ERK1/2 and Akt pathways.[5][6][7] This signaling cascade has been shown to promote neuronal survival and increase the expression of neurotrophic factors like Brain-Derived Neurotrophic Factor (BDNF) and Nerve Growth Factor (NGF).[5][8] Furthermore, **GAT229** has demonstrated anti-inflammatory properties by reducing the expression of pro-inflammatory cytokines.[4][8][9]

© 2026 BenchChem. All rights reserved.

These application notes provide detailed protocols for utilizing **GAT229** in various cell culture experiments to investigate its effects on cell viability, signal transduction, gene expression, and inflammatory responses.

Data Presentation

Table 1: Recommended Cell Lines for **GAT229** Experiments

Cell Line	Description	Key Applications
CHO-K1 (hCB1R)	Chinese Hamster Ovary cells stably expressing human CB1 receptors.[10][11][12][13]	cAMP inhibition, β-arrestin recruitment, receptor binding assays.
STHdh(Q111/Q111)	Mouse striatal cells from a Huntington's disease model, endogenously expressing CB1 receptors.[5]	ERK1/2 and Akt phosphorylation, BDNF expression, cell viability.
N18TG2	Mouse neuroblastoma cells endogenously expressing CB1 receptors.[14][15]	ERK1/2 phosphorylation, signal transduction studies.
BV-2 / ioMicroglia	Murine or human iPSC-derived microglial cell lines.[1][9]	Anti-inflammatory assays, cytokine release measurements.
Primary Neuronal Cultures	Neurons derived from rodent or human iPSCs.	BDNF/NGF expression, neurite outgrowth, synaptogenesis.

Table 2: Summary of **GAT229** In Vitro Assay Parameters

© 2026 BenchChem. All rights reserved.

Assay	Cell Line	GAT229 Concentration Range	Co-treatment (Orthosteric Agonist)	Incubation Time	Expected Outcome
Cell Viability (MTT)	Any CB1-expressing cell line	0.1 - 100 µM	Vehicle or Agonist (e.g., CP55,940)	24 - 72 hours	Determine non-toxic concentration range.[2][4][5][16]
cAMP Inhibition	CHO-K1 (hCB1R)	0.01 - 10 µM	EC20 of CP55,940 (e.g., 1-5 nM)	30 - 90 minutes	Potentiation of CP55,940-induced cAMP inhibition.[13][17][18]
β-Arrestin Recruitment	CHO-K1 (hCB1R)	0.01 - 10 µM	EC80 of CP55,940 (e.g., 100-300 nM)	90 minutes	Potentiation of CP55,940-induced β-arrestin recruitment.[19][20][21][22]
ERK1/2 Phosphorylation	STHdh(Q111/Q111), N18TG2	0.1 - 10 µM	Vehicle or sub-threshold agonist	5 - 30 minutes	Increased ERK1/2 phosphorylation.[14][15][23][24][25]
Akt Phosphorylation	STHdh(Q111/Q111)	0.1 - 10 µM	Vehicle or sub-threshold agonist	10 - 30 minutes	Increased Akt phosphorylation.[6][7][26]
BDNF/NGF Expression	STHdh(Q111/Q111), Primary Neurons	1 - 10 µM	Vehicle	24 - 48 hours	Increased BDNF and NGF mRNA

© 2026 BenchChem. All rights reserved.

					levels.[5][8][27][28][29]
Anti-inflammatory Assay	BV-2, ioMicroglia	1 - 10 µM	LPS (10-100 ng/mL)	24 hours	Reduction in LPS-induced cytokine (TNF-α, IL-1β, IL-6) release.[1][3][9][30][31]

Experimental Protocols

Cell Viability Assay (MTT)

This protocol determines the cytotoxic concentration range of **GAT229**.

Materials:

- CB1 receptor-expressing cells (e.g., CHO-K1 (hCB1R), STHdh(Q111/Q111))
- Complete culture medium
- 96-well plates
- **GAT229** stock solution (in DMSO)
- MTT (3-(4,5-dimethylthiazol-2-yl)-2,5-diphenyltetrazolium bromide) solution (5 mg/mL in PBS)[2]
- Solubilization solution (e.g., 10% SDS in 0.01 M HCl or DMSO)

Procedure:

- Seed cells in a 96-well plate at a density of 5,000-10,000 cells/well and incubate for 24 hours.
- Prepare serial dilutions of **GAT229** in complete culture medium (e.g., 0.1, 1, 10, 25, 50, 100 µM). Ensure the final DMSO concentration is ≤ 0.1%.

© 2026 BenchChem. All rights reserved.

- Remove the old medium and add 100 µL of the **GAT229** dilutions to the respective wells. Include vehicle control wells (medium with DMSO).
- Incubate for 24 to 72 hours.
- Add 10 µL of MTT solution to each well and incubate for 2-4 hours at 37°C until a purple precipitate is visible.
- Add 100 µL of solubilization solution to each well and incubate for 2-4 hours at room temperature in the dark, with gentle shaking, to dissolve the formazan crystals.
- Measure the absorbance at 570 nm using a microplate reader.

cAMP Inhibition Assay

This assay measures the potentiation of an orthosteric agonist's effect on inhibiting adenylyl cyclase.

Materials:

- CHO-K1 cells stably expressing hCB1R
- Culture medium (e.g., Ham's F-12K with 10% FBS)[11]
- Assay buffer
- **GAT229**
- Orthosteric agonist (e.g., CP55,940)
- Forskolin
- cAMP detection kit (e.g., HTRF, BRET-based)[18]

Procedure:

- Seed CHO-K1 (hCB1R) cells in a 96-well plate at 10,000-20,000 cells/well and incubate overnight.

© 2026 BenchChem. All rights reserved.

- Replace the culture medium with serum-free medium or assay buffer and incubate for 1-2 hours.
- Prepare a solution of **GAT229** (e.g., 1 µM) and an EC20 concentration of CP55,940 (a sub-maximal concentration that gives 20% of the maximal effect).
- Add the **GAT229**/CP55,940 solution to the cells. Include wells with CP55,940 alone, **GAT229** alone, and vehicle.
- Stimulate the cells with forskolin (to activate adenylyl cyclase) according to the kit manufacturer's instructions.
- Incubate for 30-90 minutes at 37°C.[10]
- Lyse the cells and measure cAMP levels according to the detection kit protocol.

β-Arrestin Recruitment Assay

This assay determines if **GAT229** potentiates agonist-induced β-arrestin recruitment to the CB1 receptor.

Materials:

- CHO-K1 cells stably expressing hCB1R and a β-arrestin reporter system (e.g., PathHunter)
- Culture medium
- Assay buffer
- **GAT229**
- Orthosteric agonist (e.g., CP55,940)
- β-arrestin detection kit

Procedure:

- Seed cells in a 384-well plate at 5,000 cells/well and incubate overnight.[19]

© 2026 BenchChem. All rights reserved.

- Replace the medium with assay buffer.
- Add **GAT229** at various concentrations.
- Add an EC80 concentration of CP55,940.
- Incubate for 90 minutes at 37°C.[19]
- Measure β-arrestin recruitment using the detection kit's protocol.

ERK1/2 and Akt Phosphorylation Assay (Western Blot)

This protocol assesses the activation of downstream signaling pathways.

Materials:

- STHdh(Q111/Q111) or N18TG2 cells
- Serum-free medium
- **GAT229**
- Lysis buffer with protease and phosphatase inhibitors
- Primary antibodies (phospho-ERK1/2, total-ERK1/2, phospho-Akt, total-Akt)
- HRP-conjugated secondary antibody
- ECL substrate

Procedure:

- Plate cells and grow to 80-90% confluency.
- Serum-starve the cells for 4-6 hours.
- Treat cells with **GAT229** (e.g., 1-10 µM) for various time points (e.g., 5, 10, 15, 30 minutes).
- Wash cells with ice-cold PBS and lyse with lysis buffer.

© 2026 BenchChem. All rights reserved.

- Determine protein concentration using a BCA assay.
- Separate 20-30 µg of protein per lane by SDS-PAGE and transfer to a PVDF membrane.
- Block the membrane with 5% BSA or non-fat milk in TBST for 1 hour.
- Incubate with primary antibodies overnight at 4°C.
- Wash and incubate with HRP-conjugated secondary antibody for 1 hour at room temperature.
- Wash and detect the signal using an ECL substrate and an imaging system. Quantify band intensities and normalize phosphorylated protein to total protein.

BDNF and NGF Gene Expression Assay (qRT-PCR)

This protocol measures the effect of **GAT229** on the transcription of neurotrophic factors.

Materials:

- Neuronal cells (e.g., STHdh(Q111/Q111), primary cortical neurons)
- **GAT229**
- RNA extraction kit
- cDNA synthesis kit
- SYBR Green or TaqMan master mix
- Primers for BDNF, NGF, and a housekeeping gene (e.g., GAPDH, β-actin)

Procedure:

- Plate cells and allow them to differentiate or acclimate.
- Treat cells with **GAT229** (e.g., 1-10 µM) for 24-48 hours.
- Extract total RNA using a suitable kit.

© 2026 BenchChem. All rights reserved.

- Synthesize cDNA from 1-2 µg of RNA.
- Perform qRT-PCR using specific primers for BDNF, NGF, and the housekeeping gene.
- Analyze the data using the ΔΔCt method to determine the relative fold change in gene expression.

Anti-inflammatory Cytokine Release Assay

This protocol evaluates the ability of **GAT229** to suppress pro-inflammatory cytokine release.

Materials:

- Microglial cells (e.g., BV-2, ioMicroglia)
- **GAT229**
- Lipopolysaccharide (LPS)
- ELISA kits for TNF-α, IL-1β, and IL-6

Procedure:

- Plate microglial cells in a 24-well plate.
- Pre-treat cells with **GAT229** (e.g., 1-10 µM) for 1-2 hours.
- Stimulate the cells with LPS (e.g., 10-100 ng/mL) for 24 hours.[1][9]
- Collect the cell culture supernatant.
- Measure the concentrations of TNF-α, IL-1β, and IL-6 in the supernatant using specific ELISA kits according to the manufacturer's instructions.

Mandatory Visualizations

© 2026 BenchChem. All rights reserved.

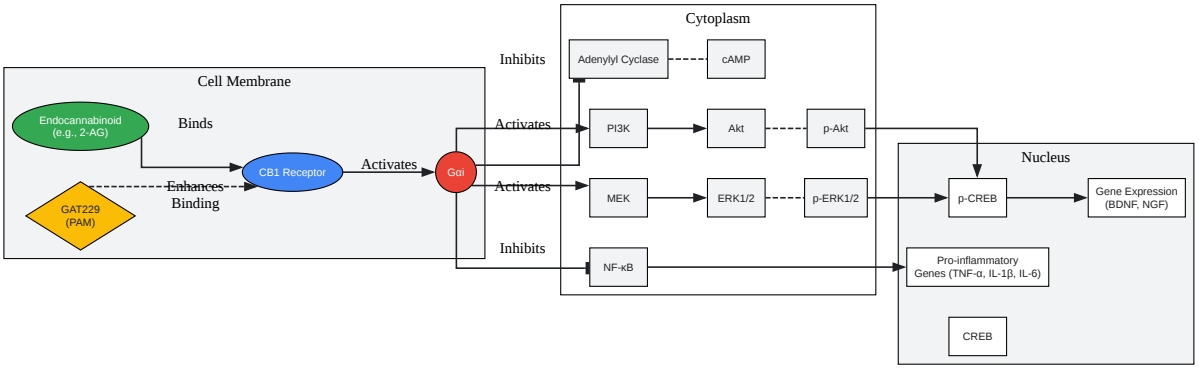

Click to download full resolution via product page

Caption: **GAT229** Signaling Pathway.

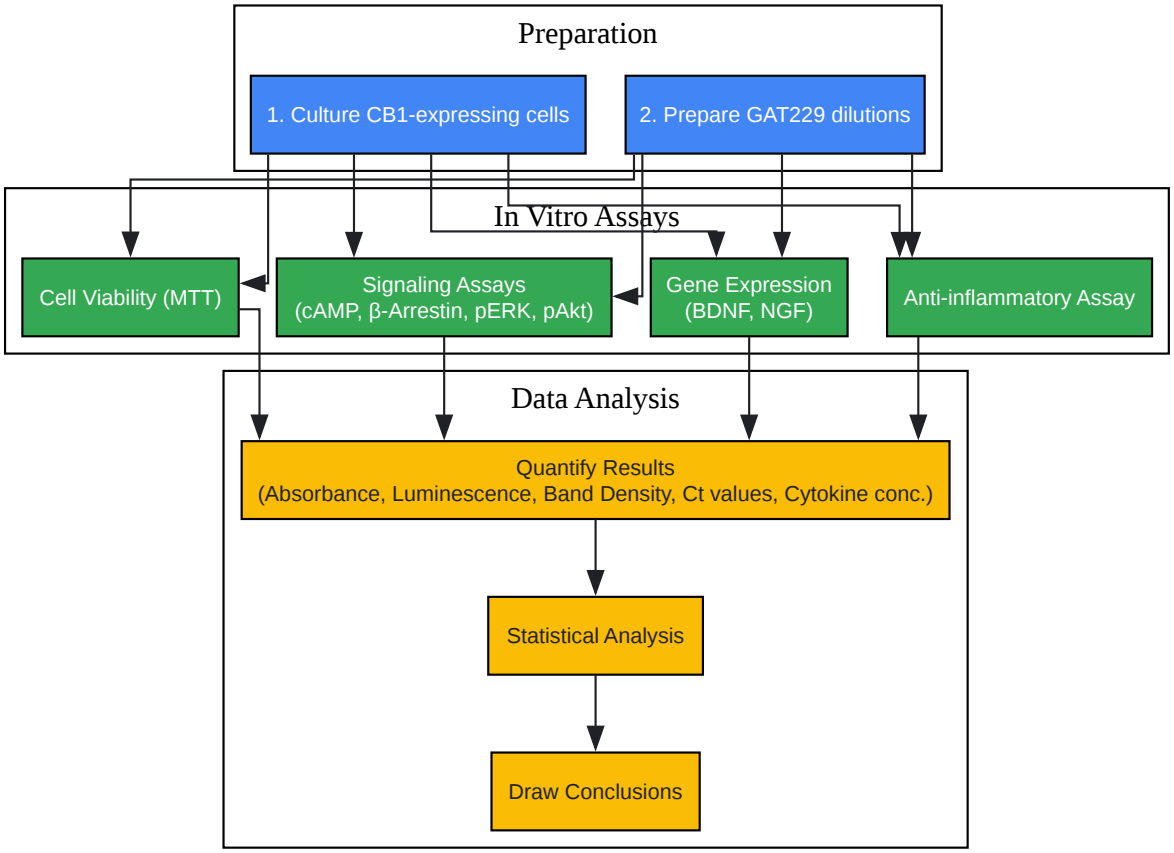

Click to download full resolution via product page

Caption: **GAT229** Experimental Workflow.

Need Custom Synthesis?

BenchChem offers custom synthesis for rare earth carbides and specific isotopiclabeling.

Email: info@benchchem.com or Request Quote Online.

References

- 1. Activation of BV2 microglia by lipopolysaccharide triggers an inflammatory reaction in PC12 cell apoptosis through a toll-like receptor 4-dependent pathway - PMC

[pmc.ncbi.nlm.nih.gov]

- 2. MTT assay protocol | Abcam [abcam.com]
- 3. labchem-wako.fujifilm.com [labchem-wako.fujifilm.com]
- 4. broadpharm.com [broadpharm.com]
- 5. Cell Viability Assays - Assay Guidance Manual - NCBI Bookshelf [ncbi.nlm.nih.gov]
- 6. The CB1 cannabinoid receptor is coupled to the activation of protein kinase B/Akt - PubMed [pubmed.ncbi.nlm.nih.gov]
- 7. The CB1 cannabinoid receptor is coupled to the activation of protein kinase B/Akt - PMC [pmc.ncbi.nlm.nih.gov]
- 8. Transcriptional Regulation of Brain-derived Neurotrophic Factor Coding Exon IX: ROLE OF NUCLEAR RESPIRATORY FACTOR 2 - PMC [pmc.ncbi.nlm.nih.gov]
- 9. bit.bio [bit.bio]
- 10. Frontiers | Pharmacological evaluation of enantiomerically separated positive allosteric modulators of cannabinoid 1 receptor, GAT591 and GAT593 [frontiersin.org]
- 11. elabscience.com [elabscience.com]
- 12. cet.bio [cet.bio]
- 13. Pharmacological evaluation of enantiomerically separated positive allosteric modulators of cannabinoid 1 receptor, GAT591 and GAT593 - PMC [pmc.ncbi.nlm.nih.gov]
- 14. Cannabinoid CB1 receptors transactivate multiple receptor tyrosine kinases and regulate serine/threonine kinases to activate ERK in neuronal cells - PMC [pmc.ncbi.nlm.nih.gov]
- 15. Frontiers | CB1 Cannabinoid Receptors Stimulate Gβγ-GRK2-Mediated FAK Phosphorylation at Tyrosine 925 to Regulate ERK Activation Involving Neuronal Focal Adhesions [frontiersin.org]
- 16. protocols.io [protocols.io]
- 17. Identification of CB1 Receptor Allosteric Sites Using Force-Biased MMC Simulated Annealing and Validation by Structure–Activity Relationship Studies - PMC [pmc.ncbi.nlm.nih.gov]
- 18. Real-time characterization of cannabinoid receptor 1 (CB1) allosteric modulators reveals novel mechanism of action - PMC [pmc.ncbi.nlm.nih.gov]
- 19. scholarlypublications.universiteitleiden.nl [scholarlypublications.universiteitleiden.nl]
- 20. Protocol to Study β-Arrestin Recruitment by CB1 and CB2 Cannabinoid Receptors | Springer Nature Experiments [experiments.springernature.com]

© 2026 BenchChem. All rights reserved.

- 21. Cellular Assay to Study β-Arrestin Recruitment by the Cannabinoid Receptors 1 and 2 | Springer Nature Experiments [experiments.springernature.com]
- 22. Protocol to Study β-Arrestin Recruitment by CB1 and CB2 Cannabinoid Receptors - PubMed [pubmed.ncbi.nlm.nih.gov]
- 23. Measuring agonist-induced ERK MAP kinase phosphorylation for G-protein-coupled receptors - PMC [pmc.ncbi.nlm.nih.gov]
- 24. researchgate.net [researchgate.net]
- 25. Redirecting [linkinghub.elsevier.com]
- 26. researchgate.net [researchgate.net]
- 27. researchgate.net [researchgate.net]
- 28. medsci.org [medsci.org]
- 29. researchgate.net [researchgate.net]
- 30. researchgate.net [researchgate.net]
- 31. researchgate.net [researchgate.net]

- To cite this document: BenchChem. [Application Notes and Protocols for GAT229 in Cell Culture Experiments]. BenchChem, [2026]. [Online PDF]. Available at: [https://www.benchchem.com/product/b1674638/docs#application-notes-and-protocols-for-gat229-in-cell-culture-experiments]

Disclaimer & Data Validity:

The information provided in this document is for Research Use Only (RUO) and is strictly not intended for diagnostic or therapeutic procedures. While BenchChem strives to provide accurate protocols, we make no warranties, express or implied, regarding the fitness of this product for every specific experimental setup.

Technical Support: The protocols provided are for reference purposes. Unsure if this reagent suits your experiment?

Need Industrial/Bulk Grade? Request Custom Synthesis Quote

© 2026 BenchChem. All rights reserved.

BenchChem

Our mission is to be the trusted global source of essential and advanced chemicals, empowering scientists and researchers to drive progress in science and industry.

Contact

Address: 3281 E Guasti Rd

Ontario, CA 91761, United States

Phone: (601) 213-4426

Email: info@benchchem.com

Contact our Ph.D. Support Team for a compatibility check

© 2026 BenchChem. All rights reserved.