Validating KCO912 activity in a new experimental setup

Author: BenchChem Technical Support Team. **Date**: May 2026

Compound of Interest	
Compound Name:	*KCO912*
CAS No.:	*185695-83-4*
Cat. No.:	*B1673375*

Get Quote

Technical Support Center: Validating KCO912 Activity

This technical support center provides researchers, scientists, and drug development professionals with comprehensive troubleshooting guides and frequently asked questions (FAQs) for validating the activity of **KCO912**, a potent and selective ATP-dependent potassium (K(ATP)) channel opener, in a new experimental setup.

Frequently Asked Questions (FAQs)

Q1: What is the primary mechanism of action for **KCO912**?

A1: **KCO912** is a potent and selective opener of ATP-dependent potassium (K(ATP)) channels. Its primary action is to increase the open probability of these channels, leading to potassium ion efflux from the cell. This hyperpolarizes the cell membrane, making it less excitable and leading to the relaxation of smooth muscle, particularly in the airways. **KCO912** interacts specifically with the sulfonylurea receptor (SUR) subunit of the K(ATP) channel, with high affinity for the SUR2B subtype found in vascular and airway smooth muscle.

© 2026 BenchChem. All rights reserved.

Q2: How can I confirm that the observed effect in my experiment is specifically due to K(ATP) channel opening?

A2: To confirm the specificity of **KCO912**'s action, it is essential to use a K(ATP) channel antagonist. Glibenclamide is a widely used and effective blocker of K(ATP) channels.[1][2][3] Pre-treatment of your experimental preparation with glibenclamide should abolish or significantly attenuate the effects of **KCO912**. A lack of inhibition by glibenclamide may suggest an off-target effect or a non-K(ATP) channel-mediated mechanism.

Q3: What are the expected downstream effects of **KCO912**-mediated K(ATP) channel opening in airway smooth muscle?

A3: The opening of K(ATP) channels in airway smooth muscle cells leads to membrane hyperpolarization. This change in membrane potential causes the closure of voltage-gated calcium channels, reducing the influx of calcium ions into the cell. The resulting decrease in intracellular calcium concentration leads to the relaxation of the airway smooth muscle, which is the basis for its bronchodilatory effect.[4][5]

Troubleshooting Guides

This section provides solutions to common issues that may arise during the experimental validation of **KCO912**.

Issue 1: No observable effect of KCO912 in a cell-based or tissue bath experiment.

© 2026 BenchChem. All rights reserved.

Possible Cause	Troubleshooting Step
Incorrect Drug Concentration	Verify the calculations for your stock and working solutions. Perform a dose-response curve to ensure you are using an effective concentration range.
Drug Degradation	Ensure proper storage of KCO912 according to the manufacturer's instructions. Prepare fresh solutions for each experiment.
Low or Absent K(ATP) Channel Expression	Confirm the expression of K(ATP) channel subunits (Kir6.x and SURx) in your cell line or tissue preparation using techniques like Western blotting or qPCR.
Cellular ATP Levels are Too High	High intracellular ATP concentrations can inhibit K(ATP) channel opening. Consider metabolic inhibition (e.g., using oligomycin or 2-deoxyglucose) to lower ATP levels and sensitize the channels to openers.
Presence of K(ATP) Channel Blockers	Ensure that no components of your experimental buffer or media have K(ATP) channel blocking activity.

Issue 2: Inconsistent or variable responses to KCO912.

© 2026 BenchChem. All rights reserved.

Possible Cause	Troubleshooting Step
Variability in Cell Culture Conditions	Maintain consistent cell passage numbers, seeding densities, and growth conditions to minimize experimental variability.
Tissue Viability Issues	For tissue bath experiments, ensure proper dissection and handling techniques to maintain tissue health. Use appropriate physiological salt solutions and maintain temperature and oxygenation.
pH and Temperature Fluctuations	Monitor and maintain stable pH and temperature throughout the experiment, as these can affect ion channel activity.
Solvent Effects	If using a solvent like DMSO to dissolve KCO912, perform a vehicle control to ensure the solvent itself is not causing an effect. Keep the final solvent concentration consistent and as low as possible.

Issue 3: Observed effect is not blocked by glibenclamide.

© 2026 BenchChem. All rights reserved.

Possible Cause	Troubleshooting Step
Insufficient Glibenclamide Concentration or Incubation Time	Ensure you are using an adequate concentration of glibenclamide and a sufficient pre-incubation time to allow for complete channel blockade.
Glibenclamide Insolubility	Glibenclamide has poor aqueous solubility. Ensure it is properly dissolved in a suitable solvent (e.g., DMSO) before dilution in your experimental buffer.
Off-target Effects of KCO912	At very high concentrations, KCO912 might exert off-target effects. Perform a thorough dose-response analysis to identify the specific concentration range for K(ATP) channel activation.
Involvement of Other Potassium Channels	Consider the possibility that other potassium channels are involved in the observed response. You can test this by using blockers for other channel types (e.g., 4-aminopyridine for voltage-gated K+ channels, iberiotoxin for large-conductance Ca2+-activated K+ channels).

Quantitative Data Summary

The following tables summarize key quantitative data for **KCO912** from various experimental setups. These values can serve as a reference for validating your own experimental results.

Table 1: Binding Affinities of **KCO912**

Radioligand	Preparation	Parameter	Value
[3H]P1075	Rat aortic strips	pKi	8.28
[3H]glibenclamide	Rat aortic strips	pKi	7.96

Table 2: Functional Potency of **KCO912**

© 2026 BenchChem. All rights reserved.

Assay	Preparation	Parameter	Value
Outward Current	HEK cells (Kir6.1 + SUR2B)	pEC50	6.8
86Rb+ Efflux	Rat aortic rings	pEC50	7.51
Inhibition of Bronchoconstriction	Spontaneously hyperreactive rhesus monkeys (inhalation)	ED50	1.2 µg/kg

Experimental Protocols

Detailed methodologies for key experiments are provided below to assist in the setup and execution of your validation studies.

Radioligand Binding Assay

This protocol is designed to determine the binding affinity of **KCO912** to K(ATP) channels.

Materials:

- Cell membranes or tissue homogenates expressing K(ATP) channels
- Radioligand (e.g., [3H]P1075 or [3H]glibenclamide)
- **KCO912**
- Binding buffer (e.g., 50 mM Tris-HCl, pH 7.4)
- Wash buffer (ice-cold)
- Glass fiber filters
- Scintillation fluid
- Scintillation counter

Procedure:

© 2026 BenchChem. All rights reserved.

- Prepare a series of dilutions of **KCO912**.
- In a microplate, combine the membrane preparation, a fixed concentration of the radioligand, and varying concentrations of **KCO912** or vehicle.
- Incubate the plate at a specified temperature (e.g., room temperature) for a sufficient time to reach binding equilibrium.
- Terminate the binding reaction by rapid filtration through glass fiber filters using a cell harvester.
- Wash the filters with ice-cold wash buffer to remove unbound radioligand.
- Place the filters in scintillation vials, add scintillation fluid, and count the radioactivity using a scintillation counter.
- Analyze the data to determine the IC50 of **KCO912**, which can then be converted to a Ki value.

86Rb+ Efflux Assay

This functional assay measures the activity of K(ATP) channels by monitoring the efflux of the potassium surrogate, 86Rb+.

Materials:

- Cells or tissues expressing K(ATP) channels
- Loading buffer containing 86RbCl
- Efflux buffer
- **KCO912**
- Glibenclamide (for validation)
- Scintillation counter

Procedure:

© 2026 BenchChem. All rights reserved.

- Load the cells or tissues with 86Rb+ by incubating them in the loading buffer for a defined period.
- Wash the cells or tissues to remove extracellular 86Rb+.
- Initiate the efflux by adding the efflux buffer.
- At specified time points, collect the efflux buffer and lyse the cells/tissues to measure the remaining intracellular 86Rb+.
- Add **KCO912** to the efflux buffer to stimulate K(ATP) channel-mediated 86Rb+ efflux.
- To confirm specificity, pre-incubate a separate set of cells/tissues with glibenclamide before adding **KCO912**.
- Measure the radioactivity in the collected efflux samples and the cell lysates using a scintillation counter.
- Calculate the rate of 86Rb+ efflux and compare the effects of **KCO912** in the presence and absence of glibenclamide.

Patch-Clamp Electrophysiology

This technique allows for the direct measurement of K(ATP) channel currents in whole-cell or single-channel configurations.

Materials:

- Cells expressing K(ATP) channels
- Patch-clamp rig with amplifier and data acquisition system
- Borosilicate glass pipettes
- Intracellular (pipette) solution
- Extracellular (bath) solution
- **KCO912**

© 2026 BenchChem. All rights reserved.

- Glibenclamide

Procedure:

- Prepare cells for patch-clamping on a coverslip.
- Pull micropipettes and fill them with the intracellular solution.
- Establish a high-resistance seal (giga-seal) between the pipette tip and the cell membrane.
- Rupture the cell membrane to achieve the whole-cell configuration.
- Clamp the cell membrane at a specific holding potential.
- Apply voltage ramps or steps to elicit ion channel currents.
- Perfuse the cell with the extracellular solution containing **KCO912** and record the changes in current.
- To confirm that the observed current is through K(ATP) channels, apply glibenclamide to block the current.
- Analyze the current-voltage relationship and the effect of **KCO912** on channel activity.

Visualizations

Signaling Pathway of KCO912 in Airway Smooth Muscle

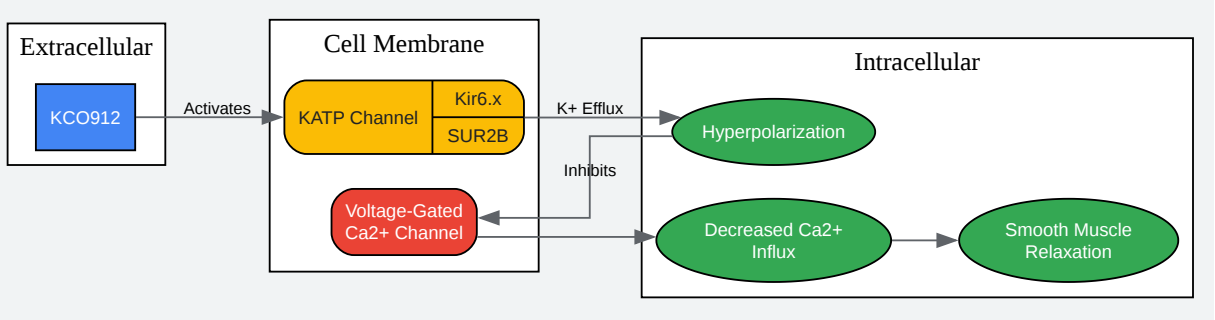

Click to download full resolution via product page

Caption: Signaling pathway of **KCO912** in airway smooth muscle cells.

Experimental Workflow for Validating KCO912 Activity

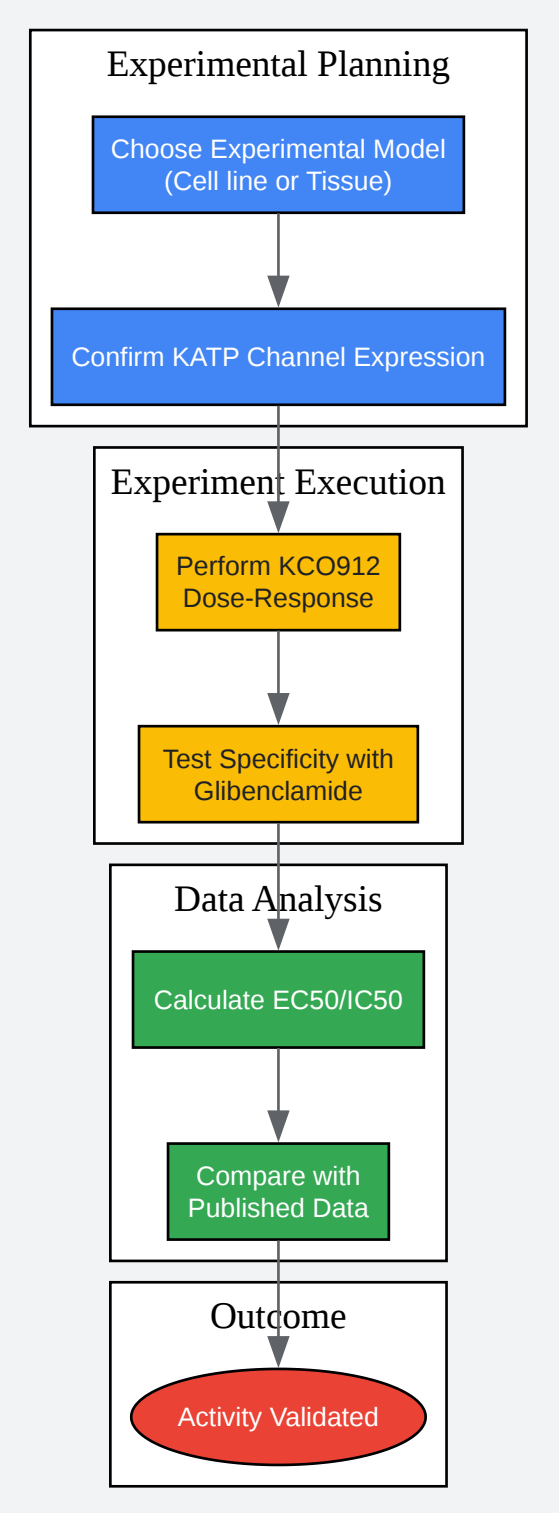

© 2026 BenchChem. All rights reserved.

Click to download full resolution via product page

Caption: A typical experimental workflow for validating the activity of **KCO912**.

Troubleshooting Logic Tree

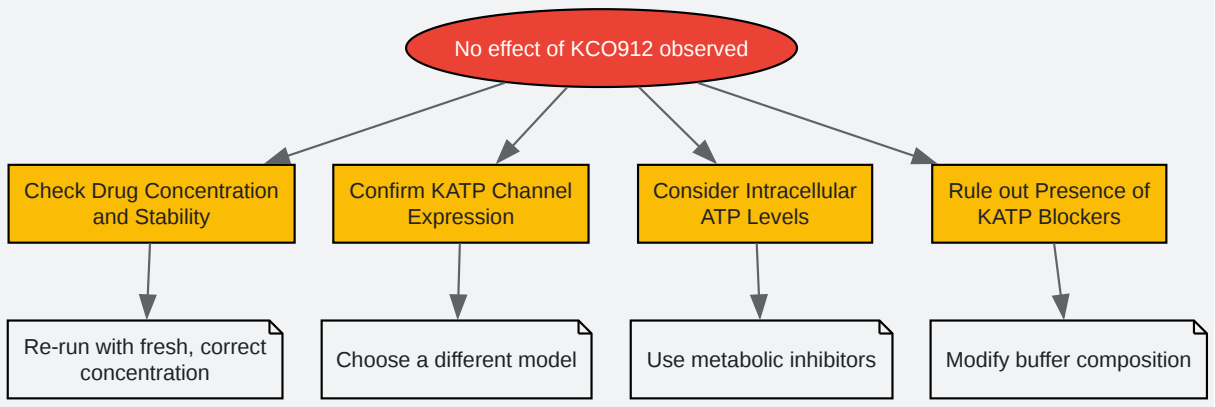

Click to download full resolution via product page

Caption: A logical approach to troubleshooting the lack of **KCO912** effect.

Need Custom Synthesis?

BenchChem offers custom synthesis for rare earth carbides and specific isotopiclabeling.

Email: info@benchchem.com or Request Quote Online.

References

- 1. Incomplete dissociation of glibenclamide from wild-type and mutant pancreatic KATP channels limits their recovery from inhibition - PMC [pmc.ncbi.nlm.nih.gov]
- 2. Glibenclamide selectively blocks ATP-sensitive K+ channels reconstituted from skeletal muscle - PubMed [pubmed.ncbi.nlm.nih.gov]
- 3. On the mechanism of inhibition of KATP channels by glibenclamide in rat ventricular myocytes - PubMed [pubmed.ncbi.nlm.nih.gov]
- 4. Potassium channel activators and bronchial asthma - PubMed [pubmed.ncbi.nlm.nih.gov]

© 2026 BenchChem. All rights reserved.

- 5. Potassium channel modulation: a new drug principle for regulation of smooth muscle contractility. Studies on isolated airways and arteries - PubMed [pubmed.ncbi.nlm.nih.gov]
- To cite this document: BenchChem. [Validating KCO912 activity in a new experimental setup]. BenchChem, [2026]. [Online PDF]. Available at: [https://www.benchchem.com/product/b1673375/docs#validating-kco912-activity-in-a-new-experimental-setup]

Disclaimer & Data Validity:

The information provided in this document is for Research Use Only (RUO) and is strictly not intended for diagnostic or therapeutic procedures. While BenchChem strives to provide accurate protocols, we make no warranties, express or implied, regarding the fitness of this product for every specific experimental setup.

Technical Support: The protocols provided are for reference purposes. Unsure if this reagent suits your experiment?

Need Industrial/Bulk Grade? Request Custom Synthesis Quote

BenchChem

Our mission is to be the trusted global source of essential and advanced chemicals, empowering scientists and researchers to drive progress in science and industry.

Contact

Address: 3281 E Guasti Rd

Ontario, CA 91761, United States

Phone: (601) 213-4426

Email: info@benchchem.com

Contact our Ph.D. Support Team for a compatibility check

© 2026 BenchChem. All rights reserved.