Navigating the Challenges of Carbamate Analysis: A Detailed Guide to GC-MS Methodologies

Author: BenchChem Technical Support Team. **Date**: May 2026

Compound of Interest

Compound Name:	*Ethyl (3-hydroxyphenyl)carbamate*
CAS No.:	*7159-96-8*
Cat. No.:	*B1671633*

Get Quote

Abstract

Carbamates, a major class of synthetic organic pesticides, present a unique analytical challenge due to their thermal lability.[1][2] While high-performance liquid chromatography (HPLC) has traditionally been a common method, gas chromatography-mass spectrometry (GC-MS) offers a powerful alternative for both quantification and confirmation, provided that appropriate strategies are employed to overcome their inherent instability. This application note provides a comprehensive guide for researchers, scientists, and drug development professionals on the successful analysis of carbamates using GC-MS. We will delve into the critical aspects of sample preparation, derivatization techniques, and optimized instrumental parameters, offering field-proven insights to ensure robust and reliable results.

Introduction: The Carbamate Conundrum

Carbamates are N-methylcarbamates derived from carbamic acid and are structurally and mechanistically similar to organophosphate pesticides. They are extensively used in agriculture as insecticides, herbicides, and fungicides to control pests and enhance crop productivity.[3]

© 2026 BenchChem. All rights reserved.

However, their potential as endocrine disruptors and their toxicity to non-target organisms, including humans, necessitate sensitive and accurate monitoring in various matrices such as food, water, and biological samples.[2][4]

The primary obstacle in carbamate analysis by GC-MS is their tendency to degrade at the high temperatures typically used in GC inlets.[2] This thermal instability can lead to poor chromatographic peak shape, low sensitivity, and inaccurate quantification. To circumvent this, two main strategies are employed: the use of advanced injection techniques that minimize thermal stress, and chemical derivatization to convert the carbamates into more volatile and thermally stable compounds.[1][5] This guide will explore both approaches, with a strong emphasis on derivatization as a robust and widely applicable solution.

The Critical Role of Sample Preparation

The journey to accurate carbamate analysis begins with meticulous sample preparation. The goal is to efficiently extract the target analytes from the sample matrix while minimizing interferences that could compromise the GC-MS analysis.

QuEChERS: The Gold Standard for Food and Agricultural Samples

For fruit and vegetable matrices, the QuEChERS (Quick, Easy, Cheap, Effective, Rugged, and Safe) method has become the industry standard.[6][7] This approach involves an initial extraction with acetonitrile followed by a cleanup step using dispersive solid-phase extraction (dSPE).[6]

The choice of dSPE sorbents is critical and depends on the matrix. Common sorbents include:

- Primary Secondary Amine (PSA): Removes organic acids, some sugars, and fatty acids.[8]
- Graphitized Carbon Black (GCB): Effective for removing pigments and sterols.[8]
- C18: Targets non-polar interferences like fats and waxes.[8]

A combination of these sorbents is often used to achieve optimal cleanup for complex matrices.[8]

© 2026 BenchChem. All rights reserved.

Solid-Phase Extraction (SPE) for Water and Liquid Samples

For aqueous samples such as surface water or beverages, Solid-Phase Extraction (SPE) is a highly effective technique for isolating and concentrating carbamates. Diatomaceous earth-based SPE columns have been successfully used for the cleanup of alcoholic beverages and soy sauce prior to GC-MS analysis.[9] The selection of the appropriate SPE sorbent and elution solvents is crucial for achieving high recovery of the target analytes.

Derivatization: Unlocking the Potential of GC-MS for Carbamates

Derivatization is a chemical modification process that converts an analyte into a substance that is more amenable to a particular analytical method.[5] For carbamates, the primary goals of derivatization are to:

- Increase thermal stability to prevent degradation in the GC inlet.[5]
- Improve volatility for better chromatographic separation.[5]
- Enhance the response of the detector for improved sensitivity.[5]

Several derivatization strategies have proven effective for carbamate analysis by GC-MS.

Silylation

Silylation involves replacing the active hydrogen on the carbamate molecule with a trimethylsilyl (TMS) group.[10] Reagents like bis-(trimethylsilyl)trifluoroacetamide (BSTFA) are commonly used.[11] This method has been successfully applied to the analysis of ethyl carbamate in alcoholic beverages.[11]

Acylation

Acylation introduces an acyl group into the carbamate molecule. Trifluoroacetic anhydride (TFAA) is a common acylation reagent that converts carbamates into their more stable trifluoroacetyl derivatives.[12][13] This approach has been effectively used for the determination of various carbamate pesticides in environmental samples.[12]

© 2026 BenchChem. All rights reserved.

Alkylation (Methylation)

Alkylation, particularly methylation, is another powerful derivatization technique. "Flash alkylation" in the GC injection port using a methylating agent like MethElute (a solution of trimethylanilinium hydroxide in methanol) can be a very efficient method.[14] This technique allows for in-situ derivatization, simplifying the sample preparation workflow.[14]

Experimental Protocols

Here, we provide detailed, step-by-step methodologies for the key workflows discussed.

Protocol 1: QuEChERS Sample Preparation for Fruits and Vegetables

This protocol is based on the widely adopted EN 15662 method.[6]

- Homogenization: Homogenize a representative portion of the fruit or vegetable sample. For dry commodities like raisins, a wetting step with deionized water is necessary prior to homogenization.[6]
- Extraction:
  - Weigh 10 g of the homogenized sample into a 50 mL centrifuge tube.
  - Add 10 mL of acetonitrile.
  - Shake vigorously for 1 minute.
  - Add a QuEChERS extraction salt packet containing 4 g $MgSO_4$, 1 g NaCl, 1 g trisodium citrate dihydrate, and 0.5 g disodium hydrogen citrate sesquihydrate.[6]
  - Immediately shake vigorously for 1 minute to prevent the formation of salt agglomerates.
  - Centrifuge at ≥3,000 g for 5 minutes.
- Dispersive Solid-Phase Extraction (dSPE) Cleanup:

© 2026 BenchChem. All rights reserved.

- Transfer 1 mL of the supernatant (acetonitrile layer) to a 2 mL dSPE tube containing the appropriate sorbents (e.g., 25 mg PSA, 25 mg C18, and 150 mg $MgSO_4$).[6]
- Vortex for 30 seconds.
- Centrifuge at high speed for 5 minutes.

- Final Extract: The resulting supernatant is ready for derivatization and GC-MS analysis.

Protocol 2: Derivatization with Trifluoroacetic Anhydride (TFAA)

This protocol is adapted from established methods for the acylation of carbamates.[12]

- Evaporation: Transfer a measured volume (e.g., 1 mL) of the cleaned-up sample extract into a conical vial and evaporate to dryness under a gentle stream of nitrogen.
- Reconstitution: Add a small volume of a suitable solvent, such as ethyl acetate (e.g., 100 µL).
- Derivatization Reaction:
  - Add 50 µL of trifluoroacetic anhydride (TFAA).
  - Cap the vial tightly and heat at 60°C for 30 minutes.
- Solvent Removal: After cooling, evaporate the excess TFAA and solvent under a gentle stream of nitrogen.
- Reconstitution for Injection: Reconstitute the dried derivative in a known volume of a suitable solvent (e.g., 100 µL of ethyl acetate or isooctane) for GC-MS injection.

GC-MS Instrumental Parameters and Data Analysis

Optimizing the GC-MS parameters is crucial for achieving good separation and sensitive detection of the derivatized carbamates.

© 2026 BenchChem. All rights reserved.

Table 1: Typical GC-MS Parameters for Carbamate Analysis

Parameter	Setting	Rationale
GC System	Agilent Intuvo 9000 or similar	Provides excellent temperature control and fast run times.[15]
Injector	Split/Splitless or Programmable Temperature Vaporization (PTV)	PTV injectors can minimize thermal stress on less stable derivatives.[1]
Injector Temperature	250°C (Isothermal) or Ramped (for PTV)	A balance between efficient vaporization and minimizing degradation.
Carrier Gas	Helium	Inert and provides good chromatographic efficiency.
Column	DB-5ms (30 m x 0.25 mm i.d., 0.25 µm film thickness) or equivalent	A mid-polarity column that provides good separation for a wide range of pesticides.[16]
Oven Program	50°C (1 min), then 10°C/min to 300°C (hold 10 min)	A typical starting point; may require optimization based on specific analytes.[16]
MS System	Triple Quadrupole (MS/MS) or Single Quadrupole	MS/MS offers higher selectivity and sensitivity, especially in complex matrices.[14]
Ionization Mode	Electron Ionization (EI) at 70 eV	Standard ionization mode for GC-MS that produces reproducible fragmentation patterns.[16]
Acquisition Mode	Selected Ion Monitoring (SIM) or Multiple Reaction Monitoring (MRM)	SIM (for single quad) and MRM (for triple quad) enhance sensitivity and selectivity by monitoring specific ions.[15] [16]

© 2026 BenchChem. All rights reserved.

Data Analysis and Quantification

Quantification is typically performed using an internal standard method to correct for variations in sample preparation and instrument response.[11] Isotope-labeled analogues of the target carbamates are ideal internal standards. Calibration curves should be prepared using matrix-matched standards to compensate for matrix effects.[17]

Method Validation: Ensuring Trustworthy Results

A robust analytical method must be validated to demonstrate its fitness for purpose. Key validation parameters include:

- Linearity: The range over which the instrument response is proportional to the analyte concentration. A regression coefficient (R^2) of >0.99 is generally considered acceptable.[11]
- Limit of Detection (LOD) and Limit of Quantification (LOQ): The lowest concentration of an analyte that can be reliably detected and quantified, respectively.[11]
- Accuracy and Precision: Accuracy is assessed through recovery studies by analyzing spiked samples at different concentration levels. Precision is determined by the relative standard deviation (RSD) of replicate measurements.[9]
- Selectivity: The ability of the method to differentiate the target analytes from other components in the sample matrix.

Table 2: Example Method Validation Data for Carbamate Analysis in Food Matrices

© 2026 BenchChem. All rights reserved.

Analyte	Matrix	Spiked Level (µg/kg)	Average Recovery (%)	RSD (%)	Reference
Ethyl Carbamate	Alcoholic Beverages	5.0 - 50.0	96.7	< 5	[9]
Carbofuran	Fruits & Vegetables	5, 20, 100	56.1 - 127.6	0.47 - 16	[18]
Carbaryl	Fruits & Vegetables	5, 20, 100	56.1 - 127.6	0.47 - 16	[18]
Methomyl	Pond Water	500 (ppt)	116.6	2.7	[14]

Note: The wide range in recovery and RSD for some analytes highlights the importance of matrix-specific method optimization and validation.

Visualizing the Workflow

To provide a clear overview of the analytical process, the following diagrams illustrate the key workflows.

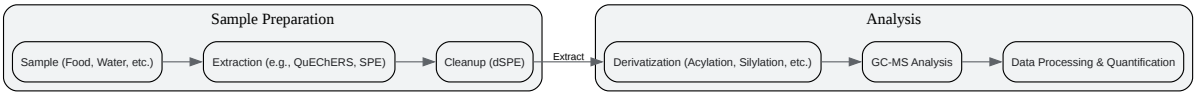

Click to download full resolution via product page

Caption: General workflow for GC-MS analysis of carbamates.

© 2026 BenchChem. All rights reserved.

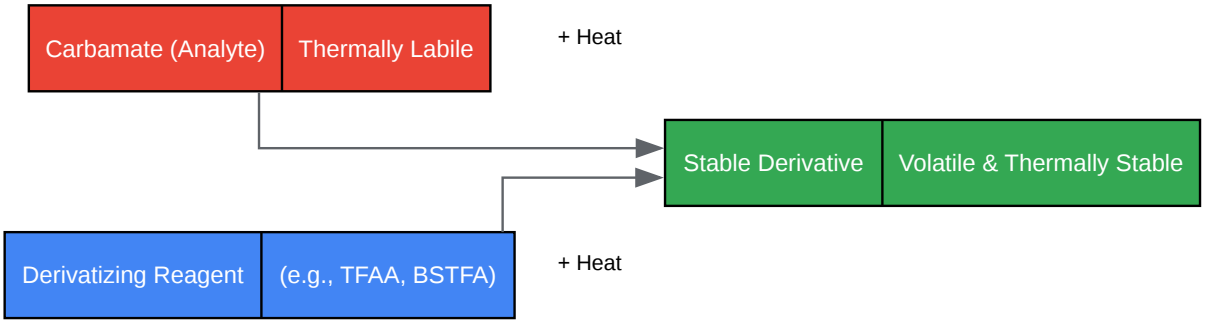

Click to download full resolution via product page

Caption: The core principle of carbamate derivatization for GC-MS.

Conclusion: A Powerful Tool for Carbamate Monitoring

Gas chromatography-mass spectrometry, when coupled with appropriate sample preparation and derivatization strategies, is a highly effective and reliable technique for the analysis of carbamates in a variety of complex matrices. The methods outlined in this application note provide a solid foundation for developing and validating robust analytical protocols. By understanding the principles behind each step, from QuEChERS extraction to the choice of derivatizing reagent, researchers can confidently tackle the challenges of carbamate analysis and generate high-quality, defensible data. The confirmatory power of mass spectrometry further solidifies GC-MS as an indispensable tool in ensuring food safety and environmental protection.[1][14]

Need Custom Synthesis?

BenchChem offers custom synthesis for rare earth carbides and specific isotopiclabeling.

Email: info@benchchem.com or Request Quote Online.

References

- 1. Analysis of carbamates by gas chromatography/quadrupole ion trap mass spectrometry - ProQuest [proquest.com]

- 2. Effective Analysis Carbamate Pesticides | Separation Science [sepscience.com]
- 3. Analytical Evaluation of Carbamate and Organophosphate Pesticides in Human and Environmental Matrices: A Review - PMC [pmc.ncbi.nlm.nih.gov]
- 4. Analytical Evaluation of Carbamate and Organophosphate Pesticides in Human and Environmental Matrices: A Review - PubMed [pubmed.ncbi.nlm.nih.gov]
- 5. pdfs.semanticscholar.org [pdfs.semanticscholar.org]
- 6. gcms.cz [gcms.cz]
- 7. Determination of Pesticide Residues Using QuEChERS Extraction with Inert GC-MSD Analytical Technique and Application on Seasonal Fruits and Vegetables in Pakistan [scirp.org]
- 8. Quantification and Confirmation of Fifteen Carbamate Pesticide Residues by Multiple Reaction Monitoring and Enhanced Product Ion Scan Modes via LC-MS/MS QTRAP System - PMC [pmc.ncbi.nlm.nih.gov]
- 9. Validation (in-house and collaboratory) of the quantification method for ethyl carbamate in alcoholic beverages and soy sauce by GC-MS - PubMed [pubmed.ncbi.nlm.nih.gov]
- 10. m.youtube.com [m.youtube.com]
- 11. Derivatization followed by gas chromatography-mass spectrometry for quantification of ethyl carbamate in alcoholic beverages - PubMed [pubmed.ncbi.nlm.nih.gov]
- 12. Determination of carbamate pesticides in environmental samples as their trifluoroacetyl or methyl derivatives by using gas chromatography–mass spectrometry - Analyst (RSC Publishing) [pubs.rsc.org]
- 13. jircas.go.jp [jircas.go.jp]
- 14. scispec.co.th [scispec.co.th]
- 15. agilent.com [agilent.com]
- 16. jstage.jst.go.jp [jstage.jst.go.jp]
- 17. conquerscientific.com [conquerscientific.com]
- 18. [Determination of 30 carbamate pesticide residues in vegetative foods by QuEChERS-liquid chromatography-tandem mass spectrometry] - PubMed [pubmed.ncbi.nlm.nih.gov]

- To cite this document: BenchChem. [Navigating the Challenges of Carbamate Analysis: A Detailed Guide to GC-MS Methodologies]. BenchChem, [2026]. [Online PDF]. Available at: [https://www.benchchem.com/product/b1671633/docs#navigating-the-challenges-of-carbamate-analysis-a-detailed-guide-to-gc-ms-methodologies]

© 2026 BenchChem. All rights reserved.

Disclaimer & Data Validity:

The information provided in this document is for Research Use Only (RUO) and is strictly not intended for diagnostic or therapeutic procedures. While BenchChem strives to provide accurate protocols, we make no warranties, express or implied, regarding the fitness of this product for every specific experimental setup.

Technical Support: The protocols provided are for reference purposes. Unsure if this reagent suits your experiment?

Need Industrial/Bulk Grade? Request Custom Synthesis Quote

BenchChem

Our mission is to be the trusted global source of essential and advanced chemicals, empowering scientists and researchers to drive progress in science and industry.

Contact

Address: 3281 E Guasti Rd

Ontario, CA 91761, United States

Phone: (601) 213-4426

Email: info@benchchem.com

Contact our Ph.D. Support Team for a compatibility check

© 2026 BenchChem. All rights reserved.