Application Note: Derivatization of Ethyl 5-hydroxydecanoate for Gas Chromatography (GC) Analysis

Author: BenchChem Technical Support Team. **Date**: May 2026

Compound of Interest

Compound Name:	*Ethyl 5-hydroxydecanoate*
CAS No.:	*75587-06-3*
Cat. No.:	*B1671634*

Get Quote

Audience: Researchers, scientists, and drug development professionals.

Introduction

Ethyl 5-hydroxydecanoate is a chemical compound that contains both an ester and a secondary hydroxyl group. The presence of the polar hydroxyl group makes it challenging to analyze directly by gas chromatography (GC) due to its relatively low volatility and potential for peak tailing caused by interactions with the stationary phase.[1][2][3] Derivatization is a chemical modification process used to convert the analyte into a more volatile and thermally stable derivative, thereby improving its chromatographic behavior and detection sensitivity.[2][4][5] This application note provides detailed protocols for two common derivatization methods for **ethyl 5-hydroxydecanoate**: silylation and acylation.

Silylation involves the replacement of the active hydrogen in the hydroxyl group with a trimethylsilyl (TMS) group.[2][4] This process significantly reduces the polarity and hydrogen bonding capacity of the molecule, leading to increased volatility and improved peak shape.[4] Common silylating agents include N,O-Bis(trimethylsilyl)trifluoroacetamide (BSTFA) and N-

© 2026 BenchChem. All rights reserved.

Methyl-N-(trimethylsilyl)trifluoroacetamide (MSTFA), often used with a catalyst such as trimethylchlorosilane (TMCS).[1][4]

Acylation introduces an acyl group to the hydroxyl moiety, forming an ester. This also serves to mask the polar hydroxyl group, enhancing volatility for GC analysis.[5] Acylating reagents such as acetic anhydride or trifluoroacetic anhydride (TFAA) are frequently employed.

This document outlines the experimental procedures for both derivatization techniques and provides guidance on GC-MS analysis of the resulting derivatives.

Experimental Protocols

Method 1: Silylation with BSTFA + 1% TMCS

This protocol describes the derivatization of **ethyl 5-hydroxydecanoate** using BSTFA with TMCS as a catalyst to form the corresponding trimethylsilyl ether.

Reagents and Materials:

- **Ethyl 5-hydroxydecanoate** standard
- N,O-Bis(trimethylsilyl)trifluoroacetamide (BSTFA) with 1% Trimethylchlorosilane (TMCS)
- Anhydrous solvent (e.g., acetonitrile, dichloromethane, or pyridine)
- Autosampler vials with caps
- Vortex mixer
- Heating block or oven
- GC-MS system

Procedure:

- Sample Preparation: Prepare a 1 mg/mL solution of **ethyl 5-hydroxydecanoate** in an anhydrous solvent.
- Derivatization Reaction:

© 2026 BenchChem. All rights reserved.

- Pipette 100 µL of the **ethyl 5-hydroxydecanoate** solution into an autosampler vial.
- Add 50 µL of BSTFA with 1% TMCS. A molar excess of the derivatizing agent is recommended to ensure complete reaction.[6]
- Cap the vial tightly and vortex for 10-15 seconds.[1]
- Heat the vial at 60-70 °C for 60 minutes in a heating block or oven.[1] Reaction time and temperature may be optimized for specific applications.[1][6]

- Sample Analysis:
  - After cooling to room temperature, the sample is ready for injection into the GC-MS system.
  - If necessary, dilute the sample with an appropriate solvent.[1]

Method 2: Acylation with Acetic Anhydride

This protocol details the acylation of **ethyl 5-hydroxydecanoate** using acetic anhydride to form the corresponding acetate ester.

Reagents and Materials:

- **Ethyl 5-hydroxydecanoate** standard
- Acetic Anhydride
- Pyridine (as a catalyst and solvent)
- Anhydrous solvent (e.g., hexane or dichloromethane for extraction)
- Saturated sodium bicarbonate solution
- Anhydrous sodium sulfate
- Autosampler vials with caps
- Vortex mixer

© 2026 BenchChem. All rights reserved.

- Heating block or water bath
- GC-MS system

Procedure:

- Sample Preparation: Prepare a 1 mg/mL solution of **ethyl 5-hydroxydecanoate** in pyridine.
- Derivatization Reaction:
  - Pipette 100 µL of the **ethyl 5-hydroxydecanoate** solution into a reaction vial.
  - Add 100 µL of acetic anhydride.
  - Cap the vial tightly and vortex for 10-15 seconds.
  - Heat the vial at 60 °C for 30 minutes in a heating block or water bath.
- Work-up and Extraction:
  - After cooling to room temperature, add 1 mL of distilled water to quench the excess acetic anhydride.
  - Neutralize the solution by slowly adding saturated sodium bicarbonate solution until effervescence ceases.
  - Extract the derivatized product with 2 x 1 mL of hexane or dichloromethane.
  - Combine the organic layers and dry over anhydrous sodium sulfate.
- Sample Analysis:
  - Transfer the dried organic extract to a clean autosampler vial for GC-MS analysis.

GC-MS Analysis Parameters (Illustrative)

The following are suggested starting parameters for the GC-MS analysis of derivatized **ethyl 5-hydroxydecanoate**. Optimization will be required for specific instrumentation and applications.

© 2026 BenchChem. All rights reserved.

Parameter	Silylated Derivative	Acylated Derivative
GC System	Agilent 8890 GC or equivalent	Agilent 8890 GC or equivalent
Column	HP-5ms (30 m x 0.25 mm, 0.25 µm) or equivalent	DB-WAX (30 m x 0.25 mm, 0.25 µm) or equivalent
Inlet Temp	250 °C	250 °C
Injection Mode	Split (20:1)	Split (20:1)
Injection Vol.	1 µL	1 µL
Carrier Gas	Helium, constant flow at 1.0 mL/min	Helium, constant flow at 1.0 mL/min
Oven Program	80 °C (hold 2 min), ramp to 280 °C at 10 °C/min, hold 5 min	100 °C (hold 2 min), ramp to 240 °C at 8 °C/min, hold 5 min
MS System	Agilent 5977B MSD or equivalent	Agilent 5977B MSD or equivalent
Ion Source Temp	230 °C	230 °C
Quad Temp	150 °C	150 °C
Ionization Mode	Electron Ionization (EI) at 70 eV	Electron Ionization (EI) at 70 eV
Scan Range	40-450 m/z	40-400 m/z

Data Presentation

The following tables present illustrative quantitative data for the validation of the silylation method for **ethyl 5-hydroxydecanoate** analysis.

Table 1: Calibration Curve and Linearity

© 2026 BenchChem. All rights reserved.

Analyte	Calibration Range (µg/mL)	R^2	Equation
TMS-Ethyl 5-hydroxydecanoate	1 - 100	0.9992	y = 15783x + 2450

Table 2: Limit of Detection (LOD) and Limit of Quantification (LOQ)

Analyte	LOD (µg/mL)	LOQ (µg/mL)
TMS-Ethyl 5-hydroxydecanoate	0.25	0.85

Table 3: Precision and Accuracy (Repeatability)

Concentration (µg/mL)	Mean Measured Conc. (µg/mL)	RSD (%)	Recovery (%)
5	4.92	3.8	98.4
25	25.4	2.5	101.6
75	73.9	2.1	98.5

Visualizations

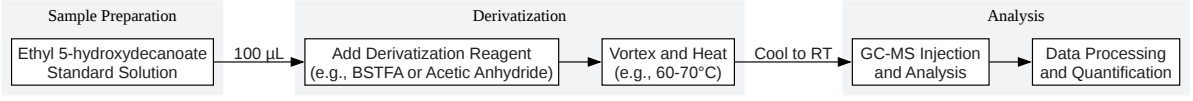

Click to download full resolution via product page

Caption: Experimental workflow for the derivatization and GC-MS analysis of **ethyl 5-hydroxydecanoate**.

© 2026 BenchChem. All rights reserved.

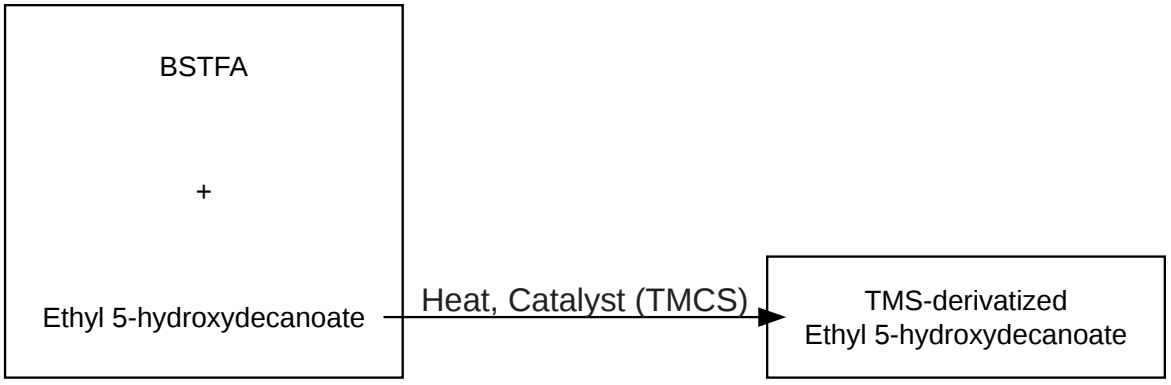

Click to download full resolution via product page

Caption: Silylation reaction of **ethyl 5-hydroxydecanoate** with BSTFA.

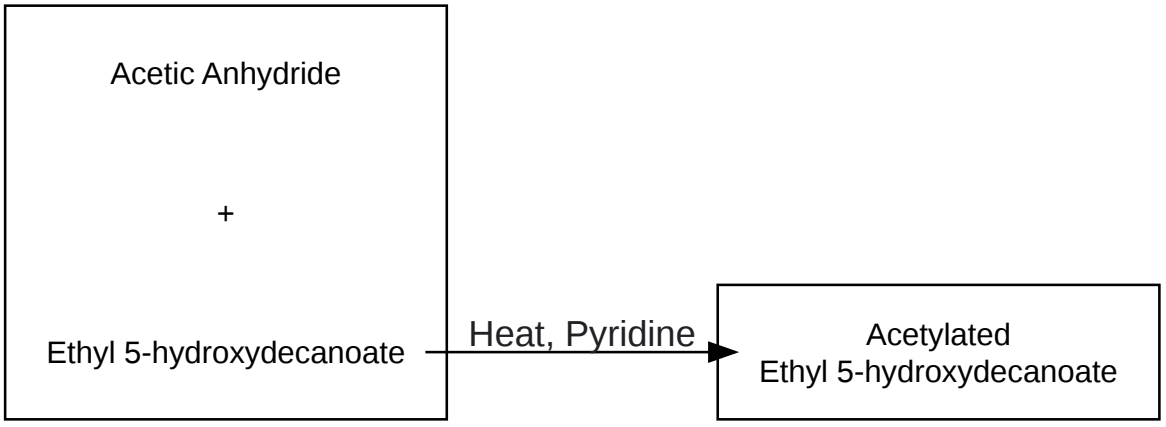

Click to download full resolution via product page

Caption: Acylation reaction of **ethyl 5-hydroxydecanoate** with acetic anhydride.

Need Custom Synthesis?

BenchChem offers custom synthesis for rare earth carbides and specific isotopiclabeling.

Email: info@benchchem.com or Request Quote Online.

References

- 1. Derivatization techniques for free fatty acids by GC [restek.com]
- 2. diverdi.colostate.edu [diverdi.colostate.edu]
- 3. youtube.com [youtube.com]
- 4. gcms.cz [gcms.cz]
- 5. scispace.com [scispace.com]
- 6. The Use of Derivatization Reagents for Gas Chromatography (GC) [sigmaaldrich.com]

- To cite this document: BenchChem. [Application Note: Derivatization of Ethyl 5-hydroxydecanoate for Gas Chromatography (GC) Analysis]. BenchChem, [2026]. [Online PDF]. Available at: [https://www.benchchem.com/product/b1671634/docs#application-note-derivatization-of-ethyl-5-hydroxydecanoate-for-gas-chromatography-gc-analysis]

Disclaimer & Data Validity:

The information provided in this document is for Research Use Only (RUO) and is strictly not intended for diagnostic or therapeutic procedures. While BenchChem strives to provide accurate protocols, we make no warranties, express or implied, regarding the fitness of this product for every specific experimental setup.

Technical Support: The protocols provided are for reference purposes. Unsure if this reagent suits your experiment?

Need Industrial/Bulk Grade? Request Custom Synthesis Quote

BenchChem

Our mission is to be the trusted global source of essential and advanced chemicals, empowering scientists and researchers to drive progress in science and industry.

Contact

Address: 3281 E Guasti Rd

Ontario, CA 91761, United States

Phone: (601) 213-4426

Email: info@benchchem.com

© 2026 BenchChem. All rights reserved.

Contact our Ph.D. Support Team for a compatibility check

© 2026 BenchChem. All rights reserved.