A Comparative Guide to the Cross-Validation of Analytical Methods for Epigoitrin

Author: BenchChem Technical Support Team. **Date**: April 2026

Compound of Interest

Compound Name:	*Epigoitrin*
CAS No.:	*1072-93-1*
Cat. No.:	*B1671491*

Get Quote

For Researchers, Scientists, and Drug Development Professionals

This guide provides an objective comparison of two distinct analytical methods for the quantification of **Epigoitrin**: a modern Supercritical Fluid Chromatography (SFC) method coupled with UV and Mass Spectrometry (MS) detection, and a more traditional Reverse-Phase High-Performance Liquid Chromatography (RP-HPLC) method. This comparison is supported by experimental data to assist researchers, scientists, and drug development professionals in selecting the most appropriate method for their specific needs.

Data Presentation: A Side-by-Side Comparison

The following table summarizes the key performance characteristics of the SFC/UV/MS and RP-HPLC methods for the analysis of **Epigoitrin**.

© 2026 BenchChem. All rights reserved.

Parameter	SFC/UV/MS Method	RP-HPLC Method
Analysis Time	6 minutes[1]	Optimized for resolution, specific time not stated but typically longer than SFC
Limit of Detection (LOD)	UV: One order of magnitude lower than NPLC/UV. MS: 2 ng/mL[1][2]	Not explicitly stated in the reviewed study
Limit of Quantitation (LOQ)	UV: One order of magnitude lower than NPLC/UV. MS: 10 ng/mL[1][2]	Not explicitly stated in the reviewed study
Linearity	Excellent linearity achieved[1]	Method demonstrated good linearity
Precision	Excellent repeatability and intermediate precision achieved[1]	Not explicitly stated in the reviewed study
Accuracy	Not explicitly stated in the reviewed study	Not explicitly stated in the reviewed study
Enantiomeric Resolution	Baseline resolution of (R)- and (S)-goitrin[3]	Optimum separation of (R)- and (S)-goitrin enantiomers achieved

Experimental Protocols

Supercritical Fluid Chromatography (SFC)/UV/MS Method

This method offers a rapid and sensitive approach for the chiral separation and quantification of **Epigoitrin**.

Instrumentation:

- Waters ACQUITY UPC² System or similar

© 2026 BenchChem. All rights reserved.

- Photodiode Array (PDA) Detector
- Single Quadrupole Mass Spectrometer (e.g., ACQUITY QDa Detector)

Chromatographic Conditions:

- Column: Chiral stationary phase, for example, (S, S)-Whelk-O 1 (4.6 x 250 mm, 10 µm)[3]
- Mobile Phase: Supercritical CO_2 and a co-solvent such as methanol.
- Gradient: A typical gradient might involve holding the co-solvent at a certain percentage, followed by a gradual increase, a hold, and a return to the initial conditions. For instance, hold at 20% methanol for 2 minutes, increase to 40% over 0.5 minutes, hold for 3 minutes, and then return to 20% in 0.5 minutes[1].
- Flow Rate: 3 mL/min[1]
- Back Pressure: 120 bar[1]
- Column Temperature: 40 °C[1]
- Injection Volume: 10 µL[1]
- Detection:
  - PDA: Wavelength range of 220 to 320 nm[1].
  - MS: Positive ion mode, monitoring for the specific m/z of **Epigoitrin**.

Sample Preparation:

A liquid-liquid extraction procedure is typically employed. For instance, an aqueous extract of the sample can be extracted multiple times with diethyl ether. The combined organic extracts are then dried down and reconstituted in a suitable solvent like methanol[1].

Reverse-Phase High-Performance Liquid Chromatography (RP-HPLC) Method

© 2026 BenchChem. All rights reserved.

This method represents a more conventional approach for the enantioselective analysis of **Epigoitrin**.

Instrumentation:

- A standard HPLC system with a pump, autosampler, column oven, and a UV detector.

Chromatographic Conditions:

- Column: A chiral column is essential for separating the enantiomers. An example is the S-Chiral A column (4.6 mm × 250 mm, 5 µm).
- Mobile Phase: A mixture of methanol and water is commonly used. The ratio is optimized to achieve the best resolution. For example, a mobile phase of methanol/water (30:70, v/v) has been shown to be effective.
- Flow Rate: The flow rate is optimized to ensure good separation and reasonable analysis time.
- Column Temperature: Column temperature is another critical parameter that is optimized to improve resolution.
- Detection: UV detection at a wavelength where **Epigoitrin** shows maximum absorbance.

Sample Preparation:

Similar to the SFC method, sample preparation typically involves extraction from the matrix. The final extract is then dissolved in the mobile phase or a compatible solvent before injection.

Mandatory Visualizations

Logical Workflow for Cross-Validation of Analytical Methods

© 2026 BenchChem. All rights reserved.

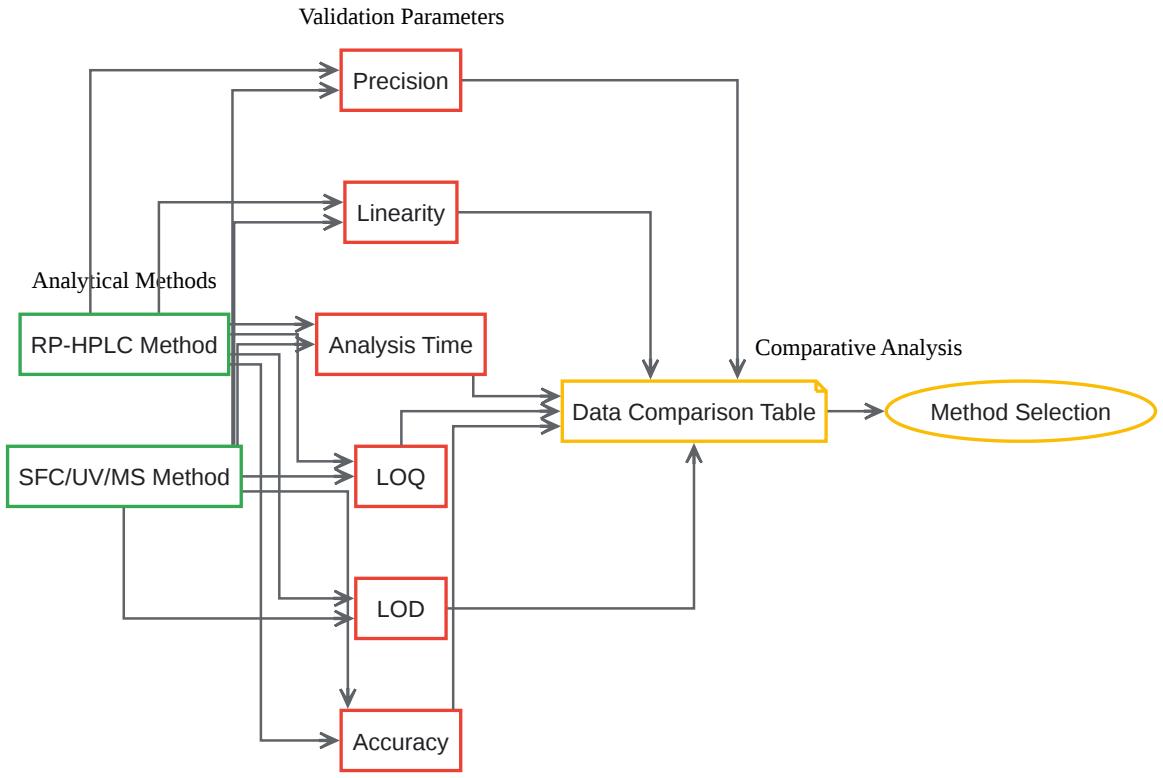

Click to download full resolution via product page

Caption: Workflow for the cross-validation and comparison of analytical methods for **Epigoitrin**.

Signaling Pathway of Glucosinolate Conversion to **Epigoitrin**

© 2026 BenchChem. All rights reserved.

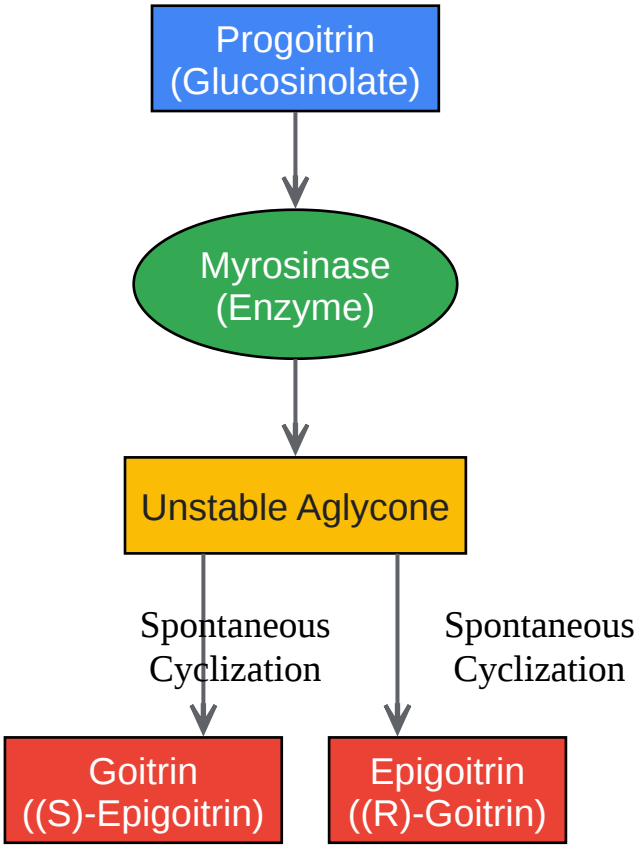

Click to download full resolution via product page

Caption: Simplified pathway of Progoitrin conversion to Goitrin and **Epigoitrin**.

Need Custom Synthesis?

BenchChem offers custom synthesis for rare earth carbides and specific isotopiclabeling.

Email: info@benchchem.com or Request Quote Online.

References

- 1. Stereospecific Assay of (R)- and (S)-Goitrin in Commercial Formulation of Radix Isatidis by Reversed Phase High-Performance Liquid Chromatography - PMC [pmc.ncbi.nlm.nih.gov]
- 2. mdpi.com [mdpi.com]
- 3. Chiral separation of thiazide diuretics by HPLC on Chiralcel OD-RH, Chiralcel OJ-R and Chirobiotic-T phases - PubMed [pubmed.ncbi.nlm.nih.gov]

- To cite this document: BenchChem. [A Comparative Guide to the Cross-Validation of Analytical Methods for Epigoitrin]. BenchChem, [2026]. [Online PDF]. Available at: [https://www.benchchem.com/product/b1671491/docs#a-comparative-guide-to-the-cross-validation-of-analytical-methods-for-epigoitrin]

Disclaimer & Data Validity:

The information provided in this document is for Research Use Only (RUO) and is strictly not intended for diagnostic or therapeutic procedures. While BenchChem strives to provide accurate protocols, we make no warranties, express or implied, regarding the fitness of this product for every specific experimental setup.

Technical Support: The protocols provided are for reference purposes. Unsure if this reagent suits your experiment?

Need Industrial/Bulk Grade? Request Custom Synthesis Quote

BenchChem

Our mission is to be the trusted global source of essential and advanced chemicals, empowering scientists and researchers to drive progress in science and industry.

Contact

Address: 3281 E Guasti Rd

Ontario, CA 91761, United States

Phone: (601) 213-4426

Email: info@benchchem.com

Contact our Ph.D. Support Team for a compatibility check