Application Notes & Protocols: High-Throughput Screening Strategies for Pyrrole Derivatives

Author: BenchChem Technical Support Team. **Date**: May 2026

Compound of Interest

Compound Name:	*4-(4-fluorobenzoyl)-1-methyl-1H-pyrrole-2-carbaldehyde*
CAS No.:	*128843-61-8*
Cat. No.:	*B167071*

Get Quote

For: Researchers, scientists, and drug development professionals.

Introduction: The Pyrrole Scaffold and the Imperative for High-Throughput Screening

The pyrrole ring is a privileged scaffold in medicinal chemistry, forming the core structural motif of a vast array of natural products and synthetic pharmaceuticals.[1] Compounds containing this five-membered aromatic heterocycle exhibit a remarkable breadth of biological activities, including anticancer, antibacterial, antiviral, and anti-inflammatory properties.[1] A significant focus in modern drug discovery has been on pyrrole derivatives as potent inhibitors of protein kinases, which are crucial regulators of cellular processes frequently dysregulated in diseases like cancer.[2][3][4]

The sheer diversity achievable through combinatorial synthesis of pyrrole libraries necessitates a robust and efficient method to identify bioactive "hits".[1] High-Throughput Screening (HTS) provides this capability, enabling the rapid evaluation of tens of thousands to millions of compounds against specific biological targets.[5][6][7] This guide provides a detailed overview

© 2026 BenchChem. All rights reserved.

of field-proven HTS protocols and application notes tailored for the discovery and characterization of novel pyrrole derivatives. We will delve into the causality behind assay selection, provide step-by-step methodologies, and emphasize the principles of self-validating systems to ensure data integrity.

Pillar 1: Foundational HTS Assays for Pyrrole Libraries

The initial phase of an HTS campaign is designed to cast a wide net. For pyrrole libraries, this often involves assessing broad biological effects like cytotoxicity or cell proliferation before moving to specific target-based assays.

Cell Viability and Cytotoxicity Screening

A primary understanding of a compound's effect on cell viability is fundamental. It can identify cytotoxic compounds for oncology applications or flag non-specific toxicity that could interfere with other assays. Two common, robust, and cost-effective methods are the Resazurin and MTT assays.

Both assays leverage the metabolic activity of living cells. Viable cells maintain a reducing environment within their cytoplasm and mitochondria. Specific mitochondrial and cytosolic dehydrogenase enzymes reduce the assay reagents, leading to a quantifiable colorimetric or fluorescent change.[8][9] The magnitude of this change is directly proportional to the number of viable, metabolically active cells.

Application Protocol: Resazurin (AlamarBlue) Cell Viability Assay

The resazurin assay is often preferred for HTS due to its simplicity (a single reagent addition), higher sensitivity, and lower toxicity compared to MTT.[3][10] It is a fluorescent assay where the non-fluorescent blue dye, resazurin, is reduced by viable cells to the highly fluorescent pink compound, resorufin.[3][8]

Step-by-Step Methodology:

- Cell Plating: Seed cells in a 96-well or 384-well black, clear-bottom tissue culture plate at a pre-determined optimal density (e.g., 5,000-10,000 cells/well). Allow cells to adhere and recover overnight under standard culture conditions (37°C, 5% CO_2).

© 2026 BenchChem. All rights reserved.

- Compound Addition: Add pyrrole derivatives from your library to the wells. Typically, this is done using automated liquid handlers to a final concentration range of 1-50 µM. Include vehicle controls (e.g., DMSO) and a positive control for cytotoxicity (e.g., Staurosporine).
- Incubation: Incubate the plates for the desired exposure period (e.g., 24, 48, or 72 hours).
- Reagent Addition: Prepare a sterile 0.15 mg/mL solution of resazurin in DPBS (pH 7.4).[3] Add a volume of this solution equal to 10-20% of the culture volume in each well (e.g., 10-20 µL for a 100 µL culture volume).[3][8][11]
- Final Incubation: Incubate the plates for 1-4 hours at 37°C, protected from light.[3][11] Incubation time should be optimized for the specific cell line's metabolic rate.[8]
- Data Acquisition: Measure the fluorescence intensity using a plate reader with an excitation wavelength of 540-570 nm and an emission wavelength of 580-590 nm.[3][8][10][12]

Application Protocol: MTT Cell Proliferation Assay

The MTT assay is a classic colorimetric method. The yellow, water-soluble tetrazolium salt, MTT (3-(4,5-dimethylthiazol-2-yl)-2,5-diphenyltetrazolium bromide), is reduced by mitochondrial dehydrogenases in living cells to form an insoluble purple formazan product.[9]

Step-by-Step Methodology:

- Cell Plating & Compound Treatment: Follow steps 1-3 as described for the Resazurin assay, typically using clear 96-well plates.
- MTT Reagent Addition: Prepare a 5 mg/mL stock solution of MTT in sterile PBS.[9] Add 10 µL of the MTT reagent to each well (for a 100 µL culture volume).[13]
- Formazan Crystal Formation: Incubate the plate for 2-4 hours at 37°C, allowing the purple formazan crystals to form within the cells.[13]
- Solubilization: Carefully aspirate the media without disturbing the cells or crystals. Add 100-150 µL of a solubilization solution (e.g., DMSO, or isopropanol with 0.04 N HCl) to each well to dissolve the formazan crystals.[14]

© 2026 BenchChem. All rights reserved.

- Plate Agitation: Gently shake the plate on an orbital shaker for 15 minutes to ensure complete dissolution of the formazan.[9]
- Data Acquisition: Measure the absorbance at 570 nm using a microplate spectrophotometer. A reference wavelength of 630-690 nm can be used to subtract background absorbance.[9]

Parameter	Resazurin Assay	MTT Assay
Principle	Reduction of Resazurin to fluorescent Resorufin	Reduction of MTT to colorimetric Formazan
Detection	Fluorescence (Ex: ~560nm, Em: ~590nm)[3][8]	Absorbance (OD: ~570nm)[13]
Pros	Homogeneous ("add-and-read"), higher sensitivity, less toxic	Well-established, cost-effective
Cons	Potential for compound interference with fluorescence	Requires solubilization step, reagent can be toxic
Plate Type	Black-walled plates	Clear plates

Pillar 2: Target-Oriented HTS Assays for Pyrrole Kinase Inhibitors

Many pyrrole derivatives are designed as kinase inhibitors.[2][11] HTS assays for this target class must be sensitive, robust, and capable of detecting the inhibition of substrate phosphorylation. Homogeneous proximity-based assays like AlphaScreen and TR-FRET are exceptionally well-suited for this purpose.

AlphaScreen (Amplified Luminescent Proximity Homogeneous Assay)

AlphaScreen technology is a bead-based, no-wash immunoassay that measures molecular interactions with high sensitivity.[15][16] The assay relies on two types of beads: a "Donor" bead and an "Acceptor" bead.[17] When a biological interaction brings the beads within a proximity of ~200 nm, a cascade of chemical reactions occurs. Upon excitation at 680 nm, a

© 2026 BenchChem. All rights reserved.

photosensitizer in the Donor bead converts ambient oxygen into a highly reactive singlet oxygen molecule.[16] This singlet oxygen diffuses and reacts with a chemiluminescent agent in the Acceptor bead, which then emits light at 520-620 nm.[4] If a pyrrole derivative inhibits the interaction (e.g., kinase phosphorylating its substrate), the beads remain distant, and no signal is produced.[18]

Application Protocol: AlphaScreen Kinase Inhibition Assay

This protocol describes a typical setup for identifying inhibitors of a kinase that phosphorylates a biotinylated peptide substrate.

Step-by-Step Methodology:

- Reagent Preparation: Prepare assay buffer (e.g., 25 mM HEPES, 100 mM NaCl, 0.1% BSA, pH 7.4).[17] Dilute kinase, biotinylated substrate peptide, and ATP to desired working concentrations in the assay buffer.
- Compound Dispensing: Using an acoustic dispenser or pin tool, dispense nanoliter volumes of the pyrrole library compounds into a 384-well or 1536-well low-volume white assay plate.
- Kinase Reaction:
  - Add the kinase and its biotinylated peptide substrate to the wells.
  - Incubate briefly (e.g., 10-15 minutes) at room temperature to allow for inhibitor binding.
  - Initiate the phosphorylation reaction by adding ATP. The final ATP concentration should ideally be at or near the K_m for the kinase to detect competitive inhibitors effectively.[19]
  - Incubate for 60 minutes at 30°C or room temperature to allow for substrate phosphorylation.[19]
- Detection:
  - Stop the kinase reaction by adding a detection mixture containing EDTA and the AlphaScreen beads:
    - Streptavidin-coated Donor beads: These will bind to the biotinylated peptide substrate.

© 2026 BenchChem. All rights reserved.

    - Protein A-coated Acceptor beads: These are pre-incubated with a phospho-specific antibody that recognizes the phosphorylated substrate.[4]
  - Incubate the plate in the dark at room temperature for at least 60 minutes to allow for bead-antibody-substrate binding.
- Data Acquisition: Read the plate on an AlphaScreen-capable plate reader (e.g., PerkinElmer EnVision). The signal is inversely proportional to the kinase activity.

Time-Resolved Fluorescence Resonance Energy Transfer (TR-FRET)

TR-FRET is another powerful proximity-based assay that combines the principles of FRET with time-resolved fluorescence.[20] It uses a long-lifetime lanthanide chelate (e.g., Europium or Terbium) as the donor fluorophore and a conventional fluorophore (e.g., Dy647 or APC) as the acceptor.[20][21] When the donor and acceptor are brought into proximity by a biological interaction, energy transfer occurs upon excitation. The key advantage of TR-FRET is the time-delayed measurement.[22][23] The reader excites the sample and then waits for a short period (microseconds) before measuring the signal. During this delay, short-lived background fluorescence and autofluorescence from library compounds decay, while the long-lived signal from the lanthanide donor persists.[22] This dramatically increases the signal-to-noise ratio, making it an excellent choice for screening chemical libraries which may contain autofluorescent pyrrole derivatives.[21]

© 2026 BenchChem. All rights reserved.

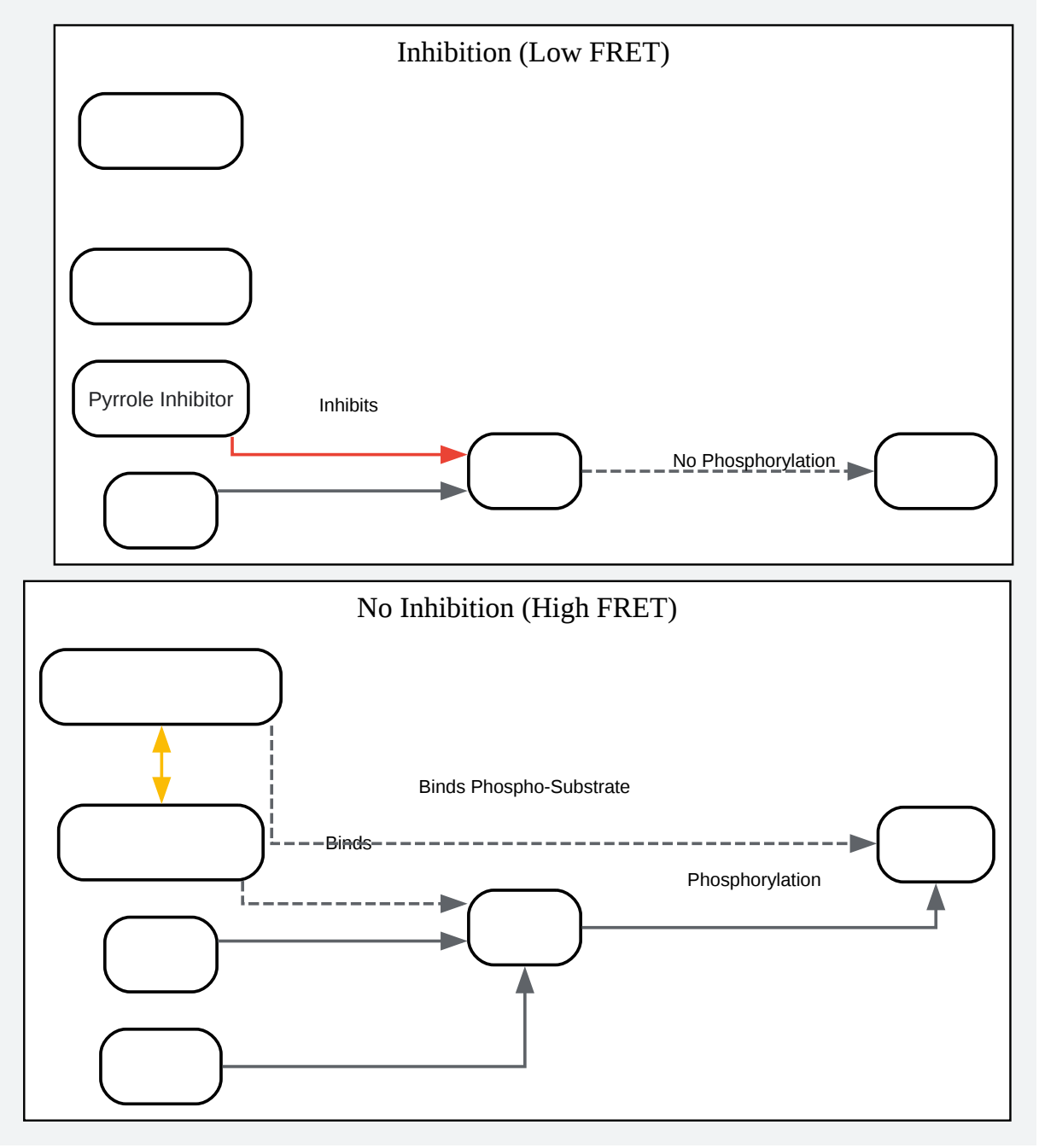

Click to download full resolution via product page

Caption: TR-FRET assay principle for kinase inhibitor screening.

© 2026 BenchChem. All rights reserved.

Pillar 3: Advanced Screening with DNA-Encoded Libraries (DELT)

For screening vast chemical spaces, DNA-Encoded Library Technology (DELT) offers an unparalleled advantage in scale and efficiency.

DELT involves synthesizing combinatorial libraries of small molecules where each compound is covalently attached to a unique, identifying DNA barcode.[2][24] Instead of screening compounds in individual wells, the entire library, potentially containing billions of distinct molecules, is incubated in a single tube with the immobilized target protein.[15][25] Non-binding molecules are washed away, and the DNA barcodes of the "hit" compounds that remain bound to the target are amplified by PCR and identified via high-throughput sequencing.[2][26] This allows for the exploration of a chemical space far larger than what is feasible with traditional plate-based HTS.

General DELT Workflow:

- Library Incubation: The pooled DEL is incubated with the target protein, which is typically immobilized on beads (e.g., His-tag isolation Dynabeads).[2][24]
- Affinity Selection & Washing: A series of wash steps are performed to remove non-specifically or weakly bound library members.[24][25]
- Elution & PCR: The specifically bound compounds (with their DNA tags) are eluted from the target. The DNA tags are then amplified via PCR.
- Sequencing & Analysis: The amplified DNA is sequenced, and the barcodes are decoded to reveal the chemical structures of the molecules that bound to the target.[2]

© 2026 BenchChem. All rights reserved.

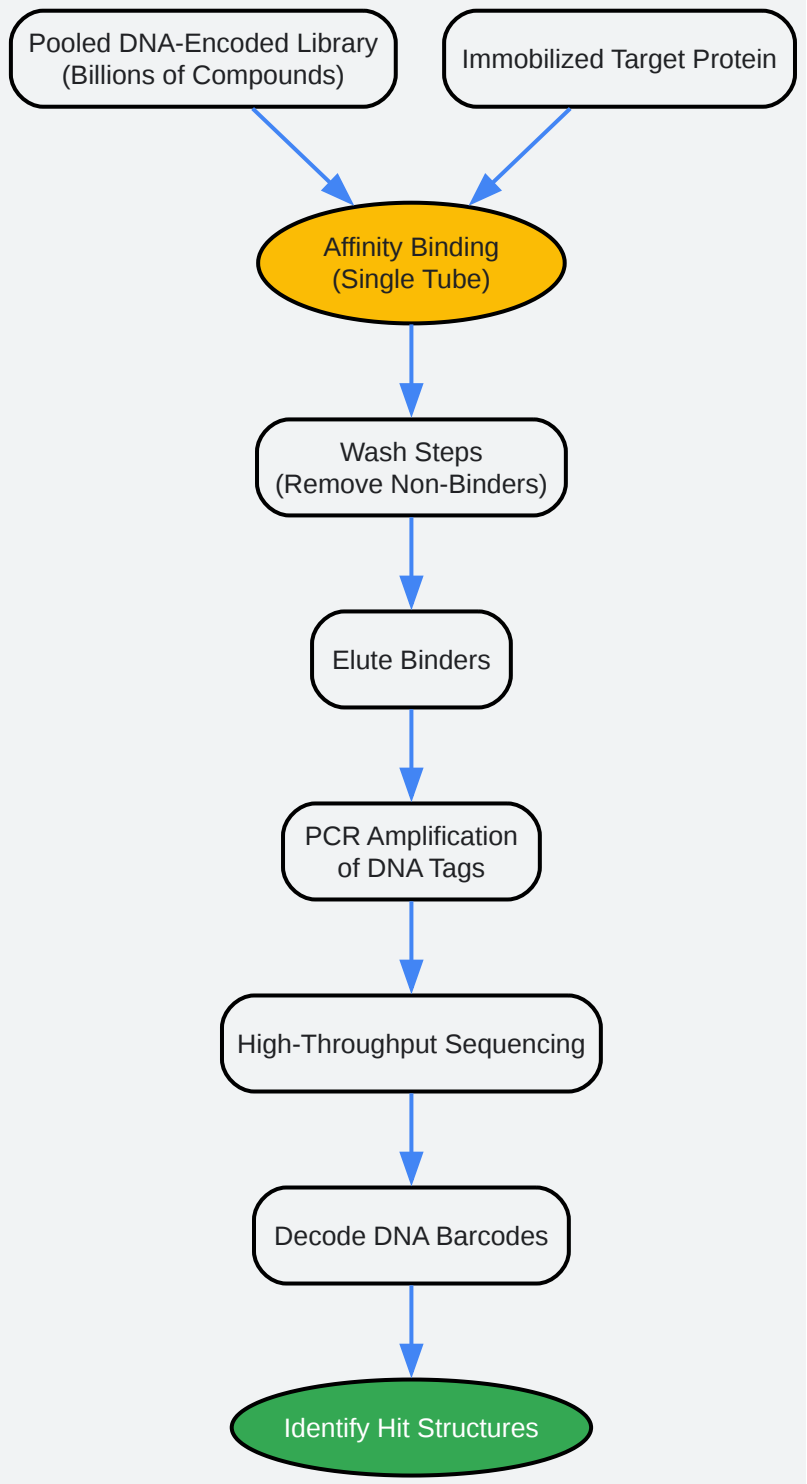

Click to download full resolution via product page

Caption: High-level workflow for a DNA-Encoded Library Technology screen.

Trustworthiness: The Self-Validating HTS System

© 2026 BenchChem. All rights reserved.

Generating reliable data is paramount. A robust HTS protocol is a self-validating system incorporating stringent quality control, hit confirmation, and counter-screening strategies.

Quality Control (QC): The Z'-Factor

The quality and reliability of an HTS assay are statistically assessed using the Z'-factor (Z-prime).[27][28] This metric evaluates the separation between the high-signal (negative control, e.g., DMSO) and low-signal (positive control, e.g., a known inhibitor) distributions.

Z'-Factor Calculation: $Z' = 1 - ((3\sigma_p + 3\sigma_n) / |\mu_p - \mu_n|)$

Where:

- σ_p and μ_p are the standard deviation and mean of the positive control.
- σ_n and μ_n are the standard deviation and mean of the negative control.

Z'-Factor Value	Assay Quality	Interpretation
> 0.5	Excellent	A large separation between control signals; ideal for HTS.[7][28][29]
0 to 0.5	Marginal	The assay may be acceptable but could have higher variability.[28]
< 0	Unacceptable	The signal distributions of the controls overlap; not suitable for screening.[28]

An assay with a Z'-factor consistently above 0.5 is considered robust and suitable for a full-scale HTS campaign.[30]

Hit Confirmation and Counter-Screening

Primary hits from HTS are merely potential leads. A rigorous validation workflow is essential to eliminate false positives.[31][32]

© 2026 BenchChem. All rights reserved.

Workflow for Hit Validation:

- Primary Screen: Initial screen of the entire library at a single concentration to identify "hits".
- Hit Confirmation: Re-testing of the initial hits in triplicate at the same single concentration to confirm activity.
- Dose-Response Analysis: Confirmed hits are tested across a range of concentrations (e.g., 8-10 point titration) to determine their potency (IC_{50} or EC_{50}).
- Counter-Screening: This is a critical step to identify compounds that interfere with the assay technology itself rather than acting on the biological target.[32]
  - Autofluorescence: For fluorescence-based assays, a common artifact is compound autofluorescence.[33] A counter-screen involves treating cells with the compound but omitting the fluorescent probe/reagent to see if the compound itself generates a signal.[33] Red-shifting the assay's excitation and emission wavelengths can also help mitigate this issue.[33]
  - Technology-Specific Interference: For AlphaScreen, compounds that quench singlet oxygen can appear as false positives. For luciferase-based assays, direct inhibition of the luciferase enzyme is a common artifact.[32] A specific counter-screen against the detection technology is crucial.
- Orthogonal Assays: Validated, on-target hits should be tested in a different assay format that relies on an independent detection principle to confirm the biological activity. This ensures the observed effect is not an artifact of the primary assay technology.

© 2026 BenchChem. All rights reserved.

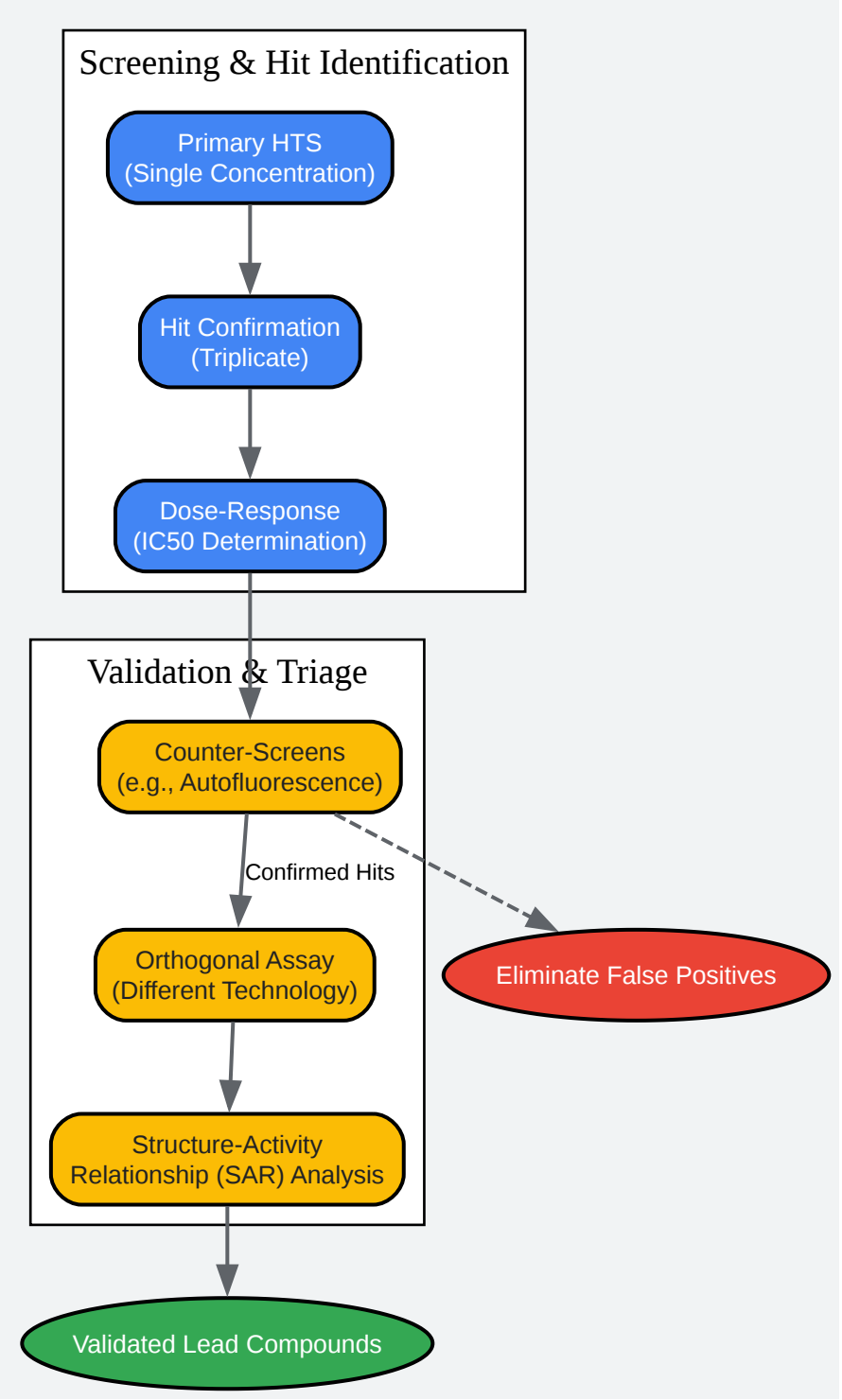

Click to download full resolution via product page

Caption: A robust workflow for HTS data analysis and hit validation.

References

© 2026 BenchChem. All rights reserved.

- Solid-Phase Synthesis of a Pyrrole Library and Identification of Bioactive Compounds - NIH. (2025).
- Fluorescence polarization assays in high-throughput screening and drug discovery: a review - PMC - NIH.
- A Time-Resolved Fluorescence Resonance Energy Transfer Assay for High-Throughput Screening of 14-3-3 Protein–Protein Interaction Inhibitors - NIH.
- Establishing and optimizing a fluorescence polarization assay - Molecular Devices.
- DNA-Encoded Library Screening for Small Molecule Drug Discovery - Creative Diagnostics.
- Fluorescence polarization assays in high-throughput screening and drug discovery: a review | Request PDF - ResearchGate.
- Fluorescence Polarization Assays in Small Molecule Screening - PMC - NIH.
- Z-factors - BIT 479/579 High-throughput Discovery.
- Standardized Protocol for Resazurin-Based Viability Assays on A549 Cell Line for Improving Cytotoxicity Data Reliability - PMC - NIH. (2024).
- Calculating a Z-factor to assess the quality of a screening assay. - FAQ 1153 - GraphPad.
- How to do a DNA-encoded library selection - CureFFI.org. (2016).
- Resazurin Assay Protocol - Creative Bioarray.
- Principle of the AlphaScreen kinase assay - ResearchGate.
- Resazurin Cell Viability Assay.
- MTT assay protocol | Abcam.
- MTT Cell Growth Assay Protocol for 96-well and 384-well LifeGel Plates - Real Research.
- MTT Cell Proliferation Assay - ATCC.
- MTT Cell Assay Protocol.
- DNA-Encoded Library (DEL) Screening | SPT Labtech.
- Issues of Z-factor and an approach to avoid them for quality control in high-throughput screening studies | Bioinformatics | Oxford Academic.
- Assay Development for Protein Kinase Enzymes - NCBI - NIH. (2012).
- An informatic pipeline for managing high-throughput screening experiments and analyzing data from stereochemically diverse libraries - PubMed Central.
- Resazurin Cell Viability Assay | Tribioscience.
- TR-FRET - Agilent.
- TR-FRET Assay Principle - Poly-Dtech.
- DNA-encoded chemical library - Wikipedia.
- High-Throughput Screening Data Analysis | Basicmedical Key.
- MTT Assay Protocol for Cell Viability and Proliferation.
- The Beginners Guide to DNA- encoded Libraries - Squarespace.
- An AlphaScreen™ Based High-throughput Screen to Identify Inhibitors of Hsp90 and Cochaperone Interaction - NIH.

© 2026 BenchChem. All rights reserved.

- Discovery of New Pyrrolo[2,3-d]pyrimidine Derivatives as Potential Multi-Targeted Kinase Inhibitors and Apoptosis Inducers - MDPI. (2023).
- From S/B to Z′: A Better Way to Measure Assay Quality in High-Throughput Screening. (2025).
- AlphaScreen-Based Assays: Ultra-High-Throughput Screening for Small-Molecule Inhibitors of Challenging Enzymes and Protein-Protein Interactions - NIH.
- Time-Resolved Fluorescence Resonance Energy Transfer [TR-FRET] Assays for Biochemical Processes - ResearchGate.
- Kinase assays | BMG LABTECH. (2020).
- Comprehensive analysis of high-throughput screens with HiTSeekR - Oxford Academic. (2016).
- Using High-Throughput Screening to Rapidly Identify Targets - Lab Manager Magazine. (2022).
- Time-resolved fluorescence energy transfer - Wikipedia.
- Interference and Artifacts in High-content Screening - Assay Guidance Manual - NCBI Bookshelf. (2025).
- Development of an HTS-Compatible Assay for the Discovery of ASK1 Signalosome Inhibitors Using AlphaScreen Technology - PMC.
- High-Throughput Screening in Drug Discovery Explained - Technology Networks. (2025).
- CHALLENGES IN SECONDARY ANALYSIS OF HIGH THROUGHPUT SCREENING DATA.
- Technical Support Center: Navigating Natural Product Interference in High-Throughput Screening - Benchchem.
- Novel Statistical Approach for Primary High-Throughput Screening Hit Selection | Request PDF - ResearchGate. (2025).
- The Importance of Counter Screens in HTS - Sygnature Discovery.
- High throughput screening of small molecule library: procedure, challenges and future. (2016).
- Brief Guide: Experimental Strategies for High-Quality Hit Selection from Small-Molecule Screening Campaigns - NIH.
- HIGH THROUGHPUT SCREENING IN DRUG DISCOVERY: PROBLEMS AND SOLUTIONS | Request PDF - ResearchGate.

Need Custom Synthesis?

BenchChem offers custom synthesis for rare earth carbides and specific isotopiclabeling.

Email: info@benchchem.com or Request Quote Online.

Sources

- 1. bpsbioscience.com [bpsbioscience.com]
- 2. creative-diagnostics.com [creative-diagnostics.com]
- 3. creative-bioarray.com [creative-bioarray.com]
- 4. researchgate.net [researchgate.net]
- 5. An informatic pipeline for managing high-throughput screening experiments and analyzing data from stereochemically diverse libraries - PMC [pmc.ncbi.nlm.nih.gov]
- 6. High-Throughput Screening Data Analysis | Basicmedical Key [basicmedicalkey.com]
- 7. bellbrooklabs.com [bellbrooklabs.com]
- 8. labbox.es [labbox.es]
- 9. MTT assay protocol | Abcam [abcam.com]
- 10. tribioscience.com [tribioscience.com]
- 11. bioquochem.com [bioquochem.com]
- 12. Standardized Protocol for Resazurin-Based Viability Assays on A549 Cell Line for Improving Cytotoxicity Data Reliability - PMC [pmc.ncbi.nlm.nih.gov]
- 13. atcc.org [atcc.org]
- 14. real-research.com [real-research.com]
- 15. sptlabtech.com [sptlabtech.com]
- 16. AlphaScreen-Based Assays: Ultra-High-Throughput Screening for Small-Molecule Inhibitors of Challenging Enzymes and Protein-Protein Interactions - PMC [pmc.ncbi.nlm.nih.gov]
- 17. rna.uzh.ch [rna.uzh.ch]
- 18. bmglabtech.com [bmglabtech.com]
- 19. Development of an HTS-Compatible Assay for the Discovery of ASK1 Signalosome Inhibitors Using AlphaScreen Technology - PMC [pmc.ncbi.nlm.nih.gov]
- 20. Time-resolved fluorescence energy transfer - Wikipedia [en.wikipedia.org]
- 21. A Time-Resolved Fluorescence Resonance Energy Transfer Assay for High-Throughput Screening of 14-3-3 Protein–Protein Interaction Inhibitors - PMC [pmc.ncbi.nlm.nih.gov]
- 22. agilent.com [agilent.com]

© 2026 BenchChem. All rights reserved.

- 23. poly-dtech.com [poly-dtech.com]
- 24. How to do a DNA-encoded library selection [cureffi.org]
- 25. static1.squarespace.com [static1.squarespace.com]
- 26. DNA-encoded chemical library - Wikipedia [en.wikipedia.org]
- 27. Z-factors – BIT 479/579 High-throughput Discovery [htds.wordpress.ncsu.edu]
- 28. Calculating a Z-factor to assess the quality of a screening assay. - FAQ 1153 - GraphPad [graphpad.com]
- 29. Fluorescence polarization assays in high-throughput screening and drug discovery: a review - PMC [pmc.ncbi.nlm.nih.gov]
- 30. academic.oup.com [academic.oup.com]
- 31. High-Throughput Screening in Drug Discovery Explained | Technology Networks [technologynetworks.com]
- 32. sygnaturediscovery.com [sygnaturediscovery.com]
- 33. Interference and Artifacts in High-content Screening - Assay Guidance Manual - NCBI Bookshelf [ncbi.nlm.nih.gov]

- To cite this document: BenchChem. [Application Notes & Protocols: High-Throughput Screening Strategies for Pyrrole Derivatives]. BenchChem, [2026]. [Online PDF]. Available at: [https://www.benchchem.com/product/b167071/docs#application-notes-protocols-high-throughput-screening-strategies-for-pyrrole-derivatives]

Disclaimer & Data Validity:

The information provided in this document is for Research Use Only (RUO) and is strictly not intended for diagnostic or therapeutic procedures. While BenchChem strives to provide accurate protocols, we make no warranties, express or implied, regarding the fitness of this product for every specific experimental setup.

Technical Support: The protocols provided are for reference purposes. Unsure if this reagent suits your experiment?

Need Industrial/Bulk Grade? Request Custom Synthesis Quote

© 2026 BenchChem. All rights reserved.

BenchChem

Our mission is to be the trusted global source of essential and advanced chemicals, empowering scientists and researchers to drive progress in science and industry.

Contact

Address: 3281 E Guasti Rd

Ontario, CA 91761, United States

Phone: (601) 213-4426

Email: info@benchchem.com

Contact our Ph.D. Support Team for a compatibility check

© 2026 BenchChem. All rights reserved.