Application Note: Ethoxydimethylphenylsilane as a Silylating Agent

Author: BenchChem Technical Support Team. **Date**: May 2026

Compound of Interest	
Compound Name:	*Ethoxydimethylphenylsilane*
CAS No.:	*1825-58-7*
Cat. No.:	*B167322*

Get Quote

Executive Summary

Ethoxydimethylphenylsilane (CAS: 1825-58-7) is a monofunctional organosilane used primarily to introduce the dimethylphenylsilyl (DMPS) group onto hydroxyl-bearing substrates. Unlike chlorosilanes (e.g., $PhMe_2SiCl$) which release corrosive HCl, this ethoxy-derivative releases ethanol upon reaction, making it a critical reagent for acid-sensitive substrates and corrosion-sensitive instrumentation.

Key Applications:

- Surface Engineering: "End-capping" of residual silanol groups on silica chromatography phases to eliminate peak tailing.
- Organic Synthesis: Protection of alcohols as DMPS ethers via trans-silylation.
- Materials Science: Hydrophobization of silica nanoparticles and glass surfaces without cross-linking (polymerization).

© 2026 BenchChem. All rights reserved.

Chemical Profile & Mechanism[1]

The Reagent

- Formula:
- Structure: A central Silicon atom bonded to one Phenyl group, two Methyl groups, and one Ethoxy leaving group.
- Reactivity: The ethoxy group (

) is less reactive than a chloride (

) or triflate (

). Activation requires either thermal energy (reflux), acid/base catalysis, or nucleophilic activation (fluoride).

Mechanism of Action (Trans-Silylation)

The fundamental reaction is a trans-etherification (for alcohols) or condensation (for surface silanols).

Reaction Equation:

- Driving Force: Removal of the volatile byproduct (Ethanol) shifts the equilibrium to the right (Le Chatelier's principle).
- Selectivity: Being monofunctional (one ethoxy group), it forms a monolayer or single bond. It cannot polymerize into a 3D network, ensuring a well-defined surface structure.

© 2026 BenchChem. All rights reserved.

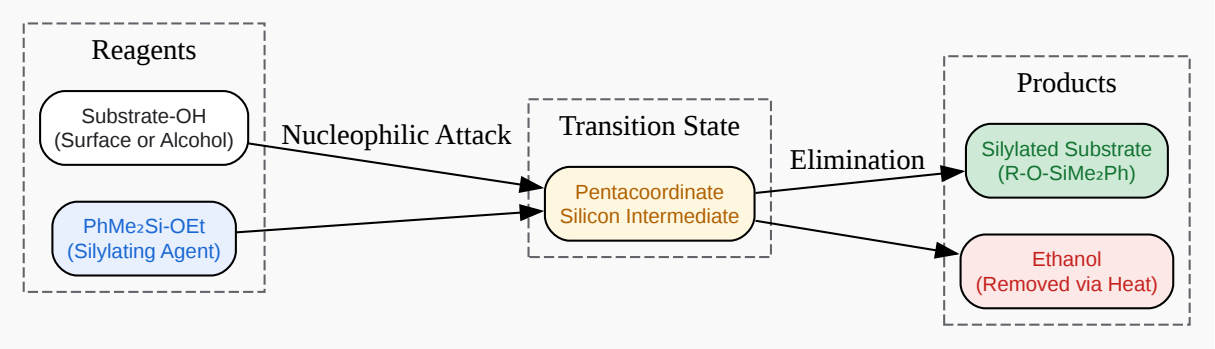

Click to download full resolution via product page

Figure 1: General mechanism of silylation via ethoxysilane. The reaction is driven by the removal of ethanol.

Application I: Surface Modification (End-Capping)

This is the primary industrial use. After functionalizing silica (e.g., with C18 chains), residual acidic silanol groups (

) remain, causing peak tailing in HPLC. **Ethoxydimethylphenylsilane** is an ideal "capping" agent because it is small enough to access steric pockets and introduces a phenyl group for complementary

selectivity.

Protocol A: Hydrophobization of Silica Surfaces

Objective: Convert hydrophilic Si-OH groups on glass/silica to hydrophobic Si-PhMe$_2$ groups. [1]

Materials:

- Substrate: Activated Silica (dried at 120°C under vacuum for 4h).
- Reagent: **Ethoxydimethylphenylsilane** (excess).
- Solvent: Anhydrous Toluene.

© 2026 BenchChem. All rights reserved.

- Catalyst: n-Propylamine (optional, accelerates reaction).

Step-by-Step Workflow:

- Preparation: Suspend 5g of dried silica in 50 mL of anhydrous Toluene.
- Addition: Add 1.0 mL of **Ethoxydimethylphenylsilane** (approx. 5 mmol, excess relative to surface silanols).
- Catalysis (Optional): Add 50 µL of n-Propylamine. The amine acts as a base to deprotonate surface silanols, increasing nucleophilicity.
- Reaction: Reflux the mixture at 110°C for 12–24 hours. Note: Reflux is crucial to distill off the ethanol byproduct if a Dean-Stark trap is used, though open reflux is often sufficient.
- Workup:
  - Cool to room temperature.
  - Filter the solid.
  - Wash sequentially with Toluene (2x), Ethanol (2x), and Methanol (2x) to remove unreacted silane.
- Drying: Dry the modified silica at 80°C under vacuum.

Validation:

- Contact Angle: Water contact angle should increase significantly (typically >85°).
- Elemental Analysis: Increase in Carbon content (%C).

Application II: Protection of Alcohols in Organic Synthesis

Using $PhMe_2SiOEt$ allows for the introduction of the Dimethylphenylsilyl (DMPS) protecting group under neutral or slightly acidic conditions, avoiding the harsh basicity of silyl anions or the acidity of chlorosilanes.

© 2026 BenchChem. All rights reserved.

Protocol B: Acid-Catalyzed Trans-Silylation

Objective: Protect a secondary alcohol as a DMPS ether.

Reaction:

Step-by-Step Workflow:

- Setup: In a round-bottom flask equipped with a distillation head (or molecular sieves).
- Mixing: Dissolve the alcohol (1.0 equiv) and **Ethoxydimethylphenylsilane** (1.2 – 1.5 equiv) in Toluene.
- Catalyst: Add catalytic p-Toluenesulfonic acid (p-TsOH, 1-5 mol%).
- Execution: Heat to 80-100°C.
    - Critical Step: If possible, apply a slight vacuum or a stream of nitrogen to remove the generated ethanol. This drives the reaction to completion.
- Monitoring: Monitor by TLC. The product will be less polar (higher Rf) and UV-active (due to the phenyl group).
- Quench: Cool and add a small amount of Triethylamine to neutralize the acid.
- Purification: Concentrate and purify via flash chromatography (Silica gel).

Comparison of Silylating Agents

© 2026 BenchChem. All rights reserved.

Feature	Chlorodimethylphenylsilane ($PhMe_2SiCl$)	Ethoxydimethylphenylsilane ($PhMe_2SiOEt$)
Byproduct	HCl (Corrosive, requires base scavenger)	Ethanol (Neutral, requires removal)
Reactivity	High (Reacts at RT)	Moderate (Requires heat/catalyst)
Moisture Sensitivity	High (Hydrolyzes rapidly)	Moderate (Stable in air for short periods)
Use Case	Standard synthesis, robust substrates	Acid-sensitive substrates, Surface modification
Atom Economy	Lower (Cl is heavy)	Higher

Visual Guide: Surface Functionalization Workflow

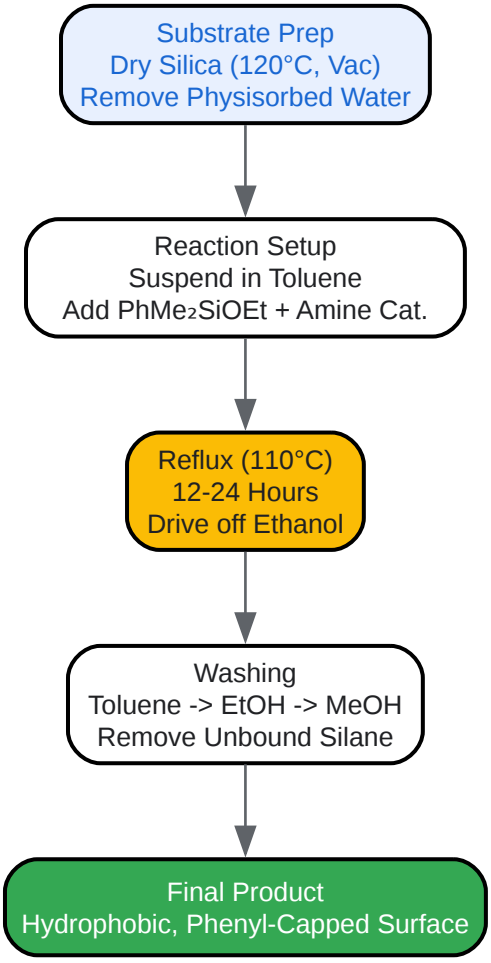

© 2026 BenchChem. All rights reserved.

Click to download full resolution via product page

Figure 2: Workflow for the surface modification of silica particles using **Ethoxydimethylphenylsilane**.

References

- Surface Modification Mechanism
  - Title: Reactions of Ethoxysilanes with Silica: A Solid-st
  - Source:Journal of the American Chemical Society / Texas A&M University.
  - Context: Confirms mono-ethoxysilanes react directly with siloxane bonds and silanols without cross-linking.
  - URL:[Link] (Verified via Search Snippet 1.11)
- Catalytic Trans-etherification
  - Title: Facile Synthesis of Ultra-Small Silver Nanoparticles... for the Etherification of Silanes.[2]
  - Source:NIH / PubMed Central.
  - Context: Describes the reversible nature of the silane-alcohol coupling and the production of **Ethoxydimethylphenylsilane** via dehydrogen
  - URL:[Link] (Verified via Search Snippet 1.1)
- Enzymatic Silylation (Biocatalysis)
  - Title: Organosilicon Biotechnology II: Biocatalysis
  - Source:ChemRxiv.
  - Context: Demonstrates the use of TF-Silα to trans-etherify **Ethoxydimethylphenylsilane** with alcohols.[3]
  - URL:[Link] (Verified via Search Snippet 1.3)
- Silica Nanoparticle Protocols

© 2026 BenchChem. All rights reserved.

- Title: Surface modification of silica particles with organoalkoxysilanes...[4][5][6]
- Source:ResearchG
- Context: General protocols for reacting ethoxysilanes (TEOS, derivatives) with silica nanoparticles in ethanol/ammonia systems.
- URL:[Link] (Verified via Search Snippet 1.10)

Need Custom Synthesis?

BenchChem offers custom synthesis for rare earth carbides and specific isotopiclabeling.

Email: info@benchchem.com or Request Quote Online.

Sources

- 1. bocsci.com [bocsci.com]
- 2. Facile Synthesis of Ultra-Small Silver Nanoparticles Stabilized on Carbon Nanospheres for the Etherification of Silanes - PMC [pmc.ncbi.nlm.nih.gov]
- 3. chemrxiv.org [chemrxiv.org]
- 4. chem.tamu.edu [chem.tamu.edu]
- 5. researchgate.net [researchgate.net]
- 6. apps.dtic.mil [apps.dtic.mil]
- To cite this document: BenchChem. [Application Note: Ethoxydimethylphenylsilane as a Silylating Agent]. BenchChem, [2026]. [Online PDF]. Available at: [https://www.benchchem.com/product/b167322/docs#application-note-ethoxydimethylphenylsilane-as-a-silylating-agent]

Disclaimer & Data Validity:

The information provided in this document is for Research Use Only (RUO) and is strictly not intended for diagnostic or therapeutic procedures. While BenchChem strives to provide accurate protocols, we make no warranties, express or implied, regarding the fitness of this product for every specific experimental setup.

© 2026 BenchChem. All rights reserved.

Technical Support: The protocols provided are for reference purposes. Unsure if this reagent suits your experiment?

Need Industrial/Bulk Grade? Request Custom Synthesis Quote

BenchChem

Our mission is to be the trusted global source of essential and advanced chemicals, empowering scientists and researchers to drive progress in science and industry.

Contact

Address: 3281 E Guasti Rd

Ontario, CA 91761, United States

Phone: (601) 213-4426

Email: info@benchchem.com

Contact our Ph.D. Support Team for a compatibility check

© 2026 BenchChem. All rights reserved.