In Vitro Characterization of 486427-17-2: A Technical Guide

Author: BenchChem Technical Support Team. **Date**: April 2026

Compound of Interest	
Compound Name:	*(3-chlorophenyl)(6,7-dimethoxy-1-((4-methoxyphenoxy)methyl)-3,4-dihydroisoquinolin-2(1H)-yl)methanone*
CAS No.:	*486427-17-2*
Cat. No.:	*B1669080*

Get Quote

An Important Note on Chemical Identity: The Chemical Abstracts Service (CAS) Registry Number 486427-17-2 has been associated with two distinct chemical entities in scientific literature and commercial databases: Dabrafenib (GSK2118436), a potent and selective inhibitor of BRAF kinases, and a research compound known as CIQ, which acts as a positive allosteric modulator of specific N-methyl-D-aspartate (NMDA) receptor subunits. This guide provides a comprehensive in vitro characterization for both compounds, presented in separate sections to avoid ambiguity. Researchers and drug development professionals should verify the identity of their compound of interest based on its intended biological target and supplier information.

Section 1: Dabrafenib (GSK2118436) - A BRAF Kinase Inhibitor

Dabrafenib is a potent and selective ATP-competitive inhibitor of RAF kinases, with particular efficacy against mutated forms of BRAF, such as BRAFV600E, which are implicated in the

© 2026 BenchChem. All rights reserved.

pathogenesis of various cancers, most notably melanoma.[1][2][3]

Quantitative In Vitro Activity

The in vitro inhibitory activity of Dabrafenib has been characterized through various biochemical and cell-based assays. The following tables summarize key quantitative data.

Table 1: Biochemical Kinase Inhibition by Dabrafenib

Target Kinase	IC50 (nM)	Assay Type	Reference
BRAFV600E	0.6	Cell-free	[4]
BRAFV600K	-	-	[4]
BRAF (wild-type)	-	-	[4]
c-RAF (RAF1)	5.0	Cell-free	[4]

Table 2: Cellular Activity of Dabrafenib in BRAFV600E Mutant Cell Lines

Cell Line	Cancer Type	IC50 (nM)	Assay Type	Reference
SKMEL28	Melanoma	3	Proliferation	[3]
A375P F11	Melanoma	8	Proliferation	[3]
Colo205	Colorectal Carcinoma	7	Proliferation	[3]
HFF (wild-type BRAF)	Human Foreskin Fibroblast	3000	Proliferation	[3]

Table 3: Inhibition of Downstream Signaling by Dabrafenib in BRAFV600E Cells

Analyte	IC50 (nM)	Cell Line	Assay Type	Reference
pMEK	6	BRAFV600E	Western Blot	[1]
pERK	3	BRAFV600E	Western Blot	[1]

© 2026 BenchChem. All rights reserved.

Experimental Protocols

This assay quantifies the binding and displacement of a fluorescently labeled, ATP-competitive kinase inhibitor (tracer) to the BRAF kinase.

- Reagent Preparation:
  - Prepare a 3X solution of the test compound (Dabrafenib) in 1X Kinase Buffer A.
  - Prepare a 3X mixture of the BRAF kinase and a Europium (Eu)-labeled anti-tag antibody in 1X Kinase Buffer A.
  - Prepare a 3X solution of an Alexa Fluor™ 647-labeled tracer in 1X Kinase Buffer A.
- Assay Procedure (384-well plate format):
  - Add 5 µL of the 3X test compound to the assay wells.
  - Add 5 µL of the 3X kinase/antibody mixture to all wells.
  - Add 5 µL of the 3X tracer solution to all wells.
- Incubation and Detection:
  - Incubate the plate at room temperature for 1 hour, protected from light.
  - Read the plate on a fluorescence plate reader capable of time-resolved fluorescence resonance energy transfer (TR-FRET).
  - Excitation is typically at ~340 nm, with emission read at ~615 nm (Europium donor) and ~665 nm (Alexa Fluor™ 647 acceptor).
- Data Analysis:
  - The emission ratio (665 nm / 615 nm) is calculated. Inhibition of tracer binding by Dabrafenib results in a decrease in the FRET signal.
  - IC50 values are determined by plotting the emission ratio against the logarithm of the Dabrafenib concentration and fitting the data to a sigmoidal dose-response curve.

© 2026 BenchChem. All rights reserved.

This assay determines the number of viable cells in culture based on the quantification of ATP, an indicator of metabolically active cells.

- Cell Plating:
  - Seed cells (e.g., SKMEL28, A375P F11) in a 96-well opaque-walled plate at a density of 5,000-10,000 cells per well in 100 µL of culture medium.
  - Incubate for 24 hours to allow for cell attachment.
- Compound Treatment:
  - Prepare serial dilutions of Dabrafenib in culture medium.
  - Add the desired concentrations of Dabrafenib to the wells and incubate for 72 hours.
- Assay Procedure:
  - Equilibrate the plate and the CellTiter-Glo® Reagent to room temperature.
  - Add 100 µL of CellTiter-Glo® Reagent to each well.
  - Mix the contents for 2 minutes on an orbital shaker to induce cell lysis.
  - Incubate at room temperature for 10 minutes to stabilize the luminescent signal.
- Detection:
  - Measure the luminescence using a plate-reading luminometer.
- Data Analysis:
  - The luminescent signal is proportional to the number of viable cells.
  - IC50 values are calculated by plotting the percentage of cell viability against the logarithm of the Dabrafenib concentration.

This method is used to assess the phosphorylation status of ERK, a downstream effector in the BRAF signaling pathway.

© 2026 BenchChem. All rights reserved.

- Cell Treatment and Lysis:
  - Plate cells and treat with various concentrations of Dabrafenib for a specified time (e.g., 1-24 hours).
  - Wash the cells with ice-cold PBS and lyse them in RIPA buffer supplemented with protease and phosphatase inhibitors.
- Protein Quantification:
  - Determine the protein concentration of the lysates using a BCA assay.
- SDS-PAGE and Western Blotting:
  - Separate equal amounts of protein (e.g., 20-30 µg) on an SDS-polyacrylamide gel.
  - Transfer the separated proteins to a PVDF membrane.
  - Block the membrane with 5% non-fat milk or BSA in TBST for 1 hour at room temperature.
- Antibody Incubation:
  - Incubate the membrane with a primary antibody specific for phosphorylated ERK (pERK) overnight at 4°C.
  - Wash the membrane with TBST and incubate with a horseradish peroxidase (HRP)-conjugated secondary antibody for 1 hour at room temperature.
- Detection:
  - Detect the signal using an enhanced chemiluminescence (ECL) substrate and an imaging system.
- Data Analysis:
  - Quantify the band intensities and normalize the pERK signal to the total ERK or a loading control (e.g., GAPDH).

© 2026 BenchChem. All rights reserved.

- IC50 values for pERK inhibition are determined from dose-response curves.

Signaling Pathway and Experimental Workflow Diagrams

© 2026 BenchChem. All rights reserved.

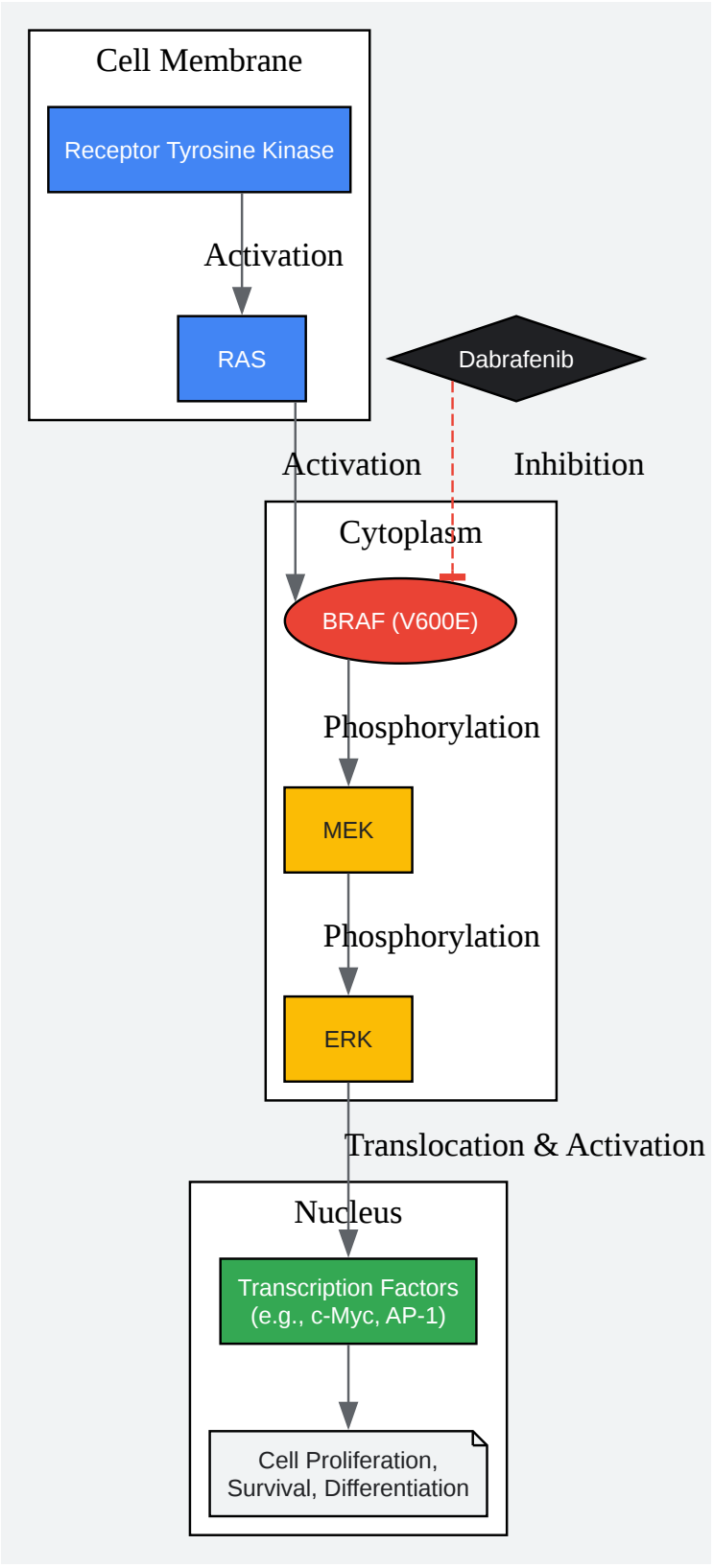

© 2026 BenchChem. All rights reserved.

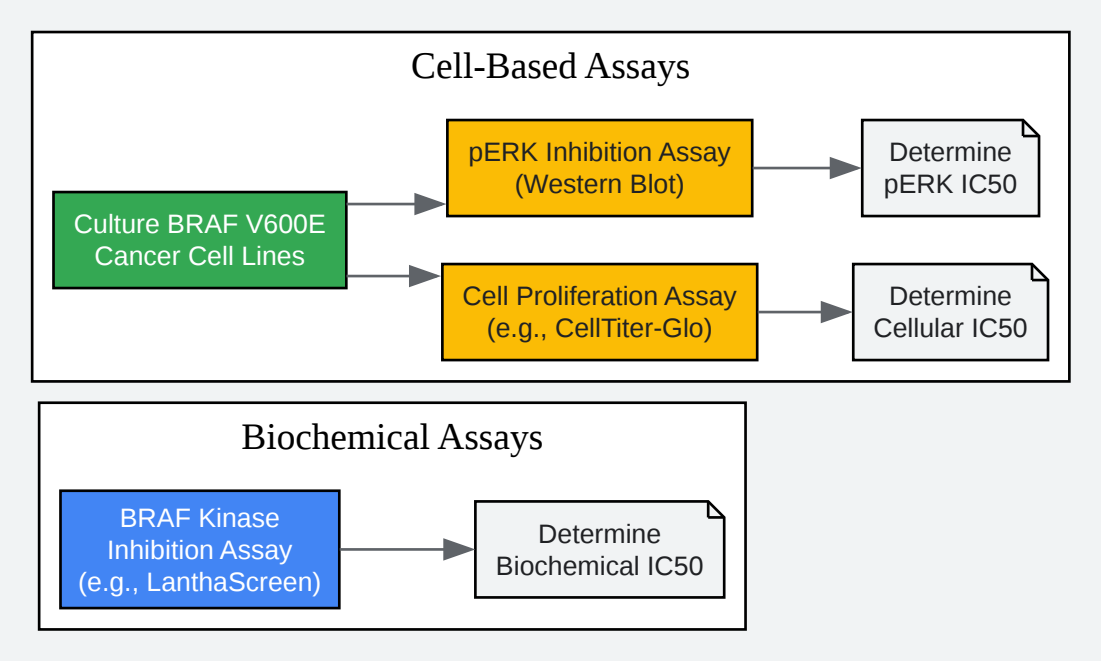

© 2026 BenchChem. All rights reserved.

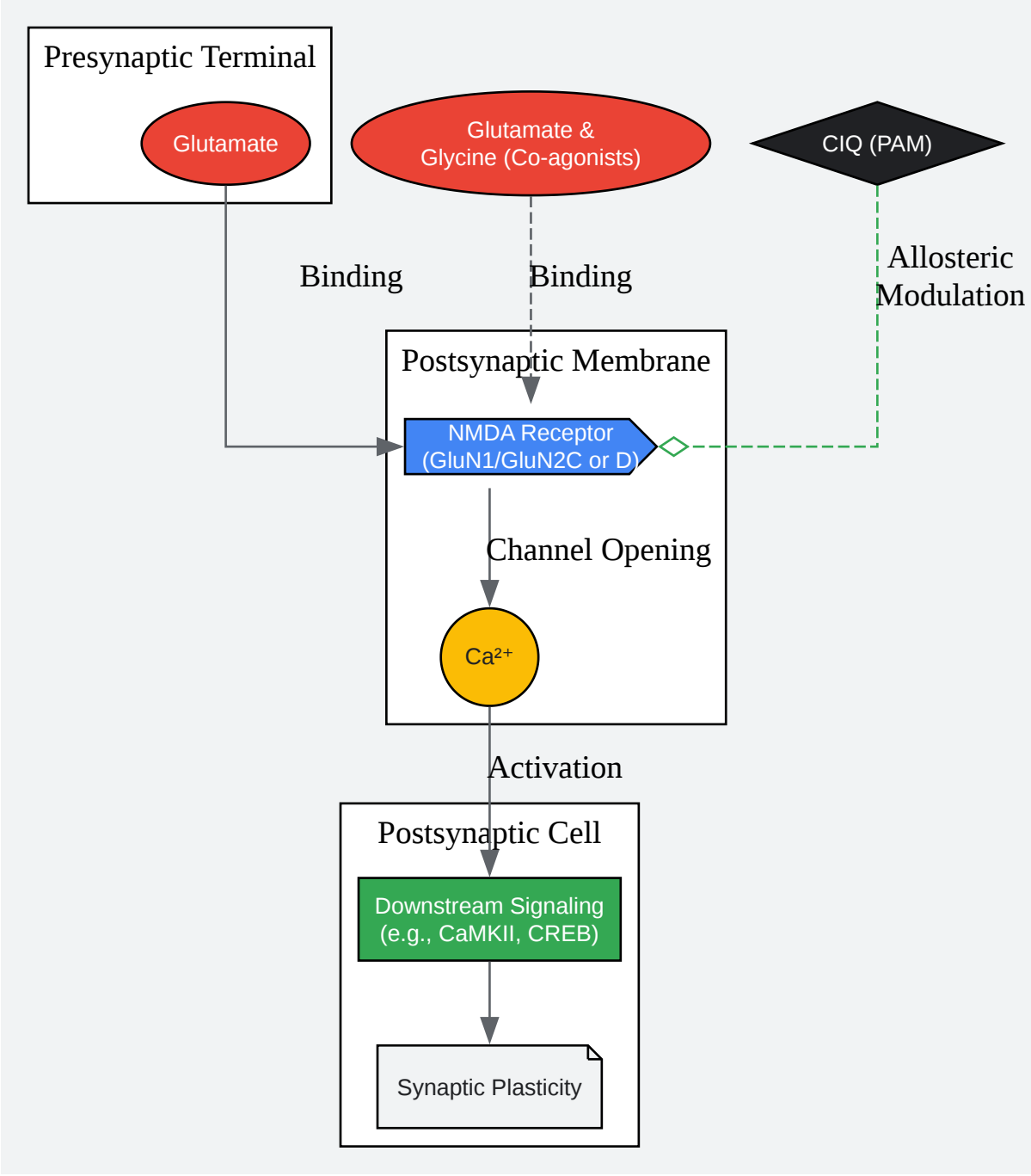

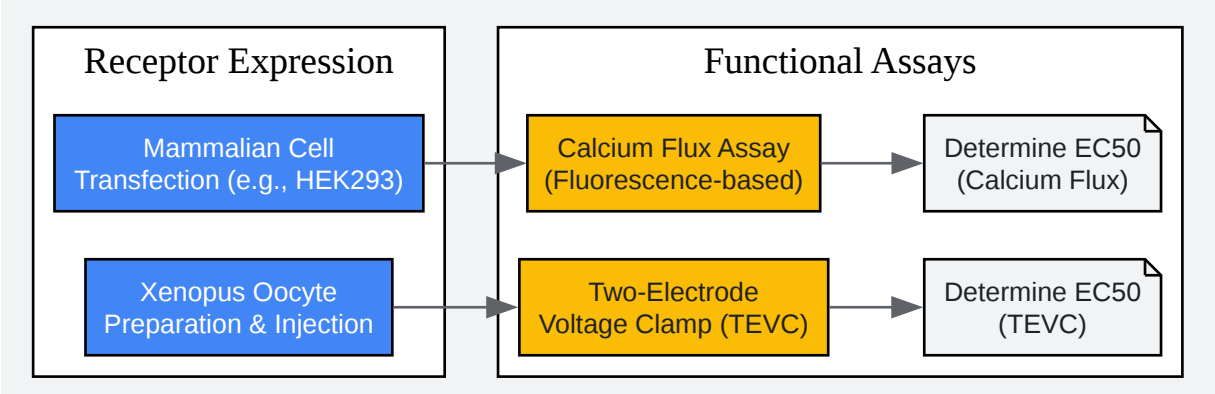

© 2026 BenchChem. All rights reserved.

Click to download full resolution via product page

Need Custom Synthesis?

BenchChem offers custom synthesis for rare earth carbides and specific isotopiclabeling.

Email: info@benchchem.com or Request Quote Online.

References

- 1. Whole-cell patch clamp electrophysiology to study ionotropic glutamatergic receptors and their roles in addiction - PMC [pmc.ncbi.nlm.nih.gov]
- 2. Whole-Cell Patch-Clamp Analysis of Recombinant NMDA Receptor Pharmacology Using Brief Glutamate Applications - PMC [pmc.ncbi.nlm.nih.gov]
- 3. documents.thermofisher.com [documents.thermofisher.com]
- 4. Dabrafenib; Preclinical Characterization, Increased Efficacy when Combined with Trametinib, while BRAF/MEK Tool Combination Reduced Skin Lesions - PMC [pmc.ncbi.nlm.nih.gov]
- To cite this document: BenchChem. [In Vitro Characterization of 486427-17-2: A Technical Guide]. BenchChem, [2026]. [Online PDF]. Available at: [https://www.benchchem.com/product/b1669080/docs#in-vitro-characterization-of-486427-17-2-a-technical-guide]

Disclaimer & Data Validity:

The information provided in this document is for Research Use Only (RUO) and is strictly not intended for diagnostic or therapeutic procedures. While BenchChem strives to provide accurate protocols, we make no warranties, express or implied, regarding the fitness of this product for every specific experimental setup.

Technical Support: The protocols provided are for reference purposes. Unsure if this reagent suits your experiment?

Need Industrial/Bulk Grade? Request Custom Synthesis Quote

© 2026 BenchChem. All rights reserved.

BenchChem

Our mission is to be the trusted global source of essential and advanced chemicals, empowering scientists and researchers to drive progress in science and industry.

Contact

Address: 3281 E Guasti Rd

Ontario, CA 91761, United States

Phone: (601) 213-4426

Email: info@benchchem.com

Contact our Ph.D. Support Team for a compatibility check

© 2026 BenchChem. All rights reserved.