Crambene Signaling Pathways in Mammalian Cells: An In-depth Technical Guide

Author: BenchChem Technical Support Team. **Date**: April 2026

Compound of Interest

Compound Name:	*Crambene*
CAS No.:	*6071-81-4*
Cat. No.:	*B1669600*

Get Quote

For Researchers, Scientists, and Drug Development Professionals

Abstract

Crambene, a nitrile derived from the hydrolysis of glucosinolates found in cruciferous vegetables, has demonstrated notable bioactivity in mammalian cells. This technical guide provides a comprehensive overview of the core signaling pathways modulated by **crambene**, with a primary focus on its well-documented role in the activation of the Nrf2-mediated antioxidant response and its induction of G2/M cell cycle arrest. This document synthesizes the current understanding of **crambene**'s mechanisms of action, offers detailed experimental protocols for its study, and presents visual representations of the key molecular pathways and workflows. While direct quantitative data for **crambene** is limited in the public domain, this guide provides a framework for its investigation, drawing parallels with the well-characterized effects of structurally related isothiocyanates.

Core Signaling Pathways Modulated by **Crambene**

Crambene's bioactivity in mammalian cells is primarily attributed to its influence on two key cellular processes: the antioxidant defense system and cell cycle regulation.

© 2026 BenchChem. All rights reserved.

Nrf2-Mediated Antioxidant Response Pathway

Crambene is a potent inducer of the Nrf2 (Nuclear factor erythroid 2-related factor 2) signaling pathway, a critical regulator of cellular defense against oxidative and electrophilic stress. The activation of this pathway by **crambene** leads to the upregulation of a suite of cytoprotective genes, most notably NAD(P)H:quinone oxidoreductase 1 (NQO1 or QR).

Mechanism of Action:

Under basal conditions, Nrf2 is sequestered in the cytoplasm by its repressor protein, Kelch-like ECH-associated protein 1 (Keap1), which facilitates its ubiquitination and subsequent proteasomal degradation. **Crambene**, as an electrophilic compound, is hypothesized to react with specific cysteine residues on Keap1. This interaction induces a conformational change in Keap1, leading to the dissociation of Nrf2. The stabilized Nrf2 then translocates to the nucleus, where it heterodimerizes with small Maf proteins and binds to the Antioxidant Response Element (ARE) in the promoter regions of its target genes, thereby initiating their transcription. This mechanism is analogous to that of other well-studied isothiocyanates like sulforaphane.[1]

Key Molecular Players:

- **Crambene**: The activating ligand.
- Keap1: The cytoplasmic repressor of Nrf2, acting as a sensor for electrophilic stress.
- Nrf2: The master transcriptional regulator of the antioxidant response.
- Antioxidant Response Element (ARE): The DNA sequence in the promoter of target genes to which Nrf2 binds.
- NAD(P)H:quinone oxidoreductase 1 (NQO1): A key phase II detoxification enzyme upregulated by the Nrf2 pathway.

Synergistic Effects:

Co-treatment of cells with **crambene** and other phytochemicals, such as indole-3-carbinol (I3C) acid condensates (I3C-A), can result in a synergistic upregulation of NQO1.[1] While

© 2026 BenchChem. All rights reserved.

crambene primarily activates the ARE, I3C-A can activate the Xenobiotic Response Element (XRE), leading to a more robust induction of cytoprotective enzymes.[1]

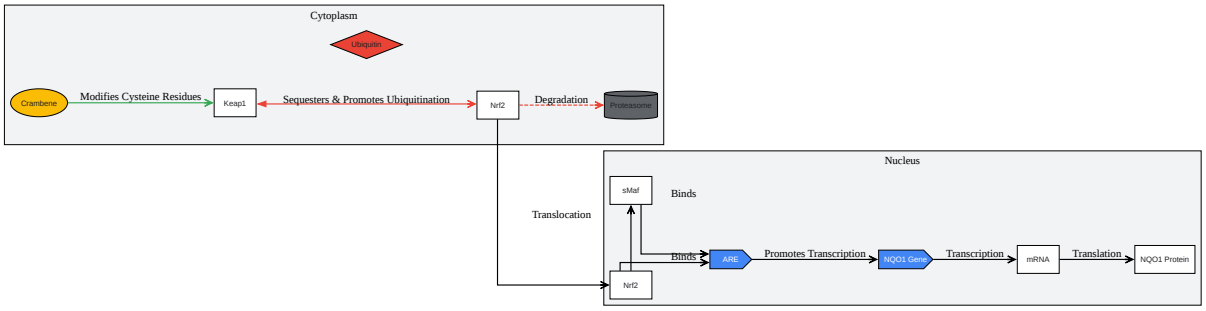

Click to download full resolution via product page

Crambene-induced Nrf2 signaling pathway.

G2/M Cell Cycle Arrest

Crambene has been observed to induce cell cycle arrest at the G2/M transition in various cancer cell lines. This effect is a common feature of many isothiocyanates and represents a key mechanism for their anti-proliferative activity.

Mechanism of Action:

© 2026 BenchChem. All rights reserved.

The progression from the G2 to the M phase of the cell cycle is tightly regulated by the activity of the Cyclin B1/Cdc2 (CDK1) complex. The activation of this complex is dependent on the dephosphorylation of Cdc2 by the phosphatase Cdc25C. It is hypothesized that **crambene**, similar to other isothiocyanates, induces G2/M arrest by downregulating the expression or promoting the degradation of key regulatory proteins, particularly Cdc25C and potentially Cyclin B1. The resulting decrease in active Cyclin B1/Cdc2 complex prevents the cell from entering mitosis.

Key Molecular Players:

- Cdc2 (CDK1): A cyclin-dependent kinase that is essential for entry into mitosis.
- Cyclin B1: The regulatory partner of Cdc2.
- Cdc25C: A phosphatase that activates the Cdc2/Cyclin B1 complex by removing inhibitory phosphates.
- p21 (Waf1/Cip1): A cyclin-dependent kinase inhibitor that can also play a role in G2/M arrest.

© 2026 BenchChem. All rights reserved.

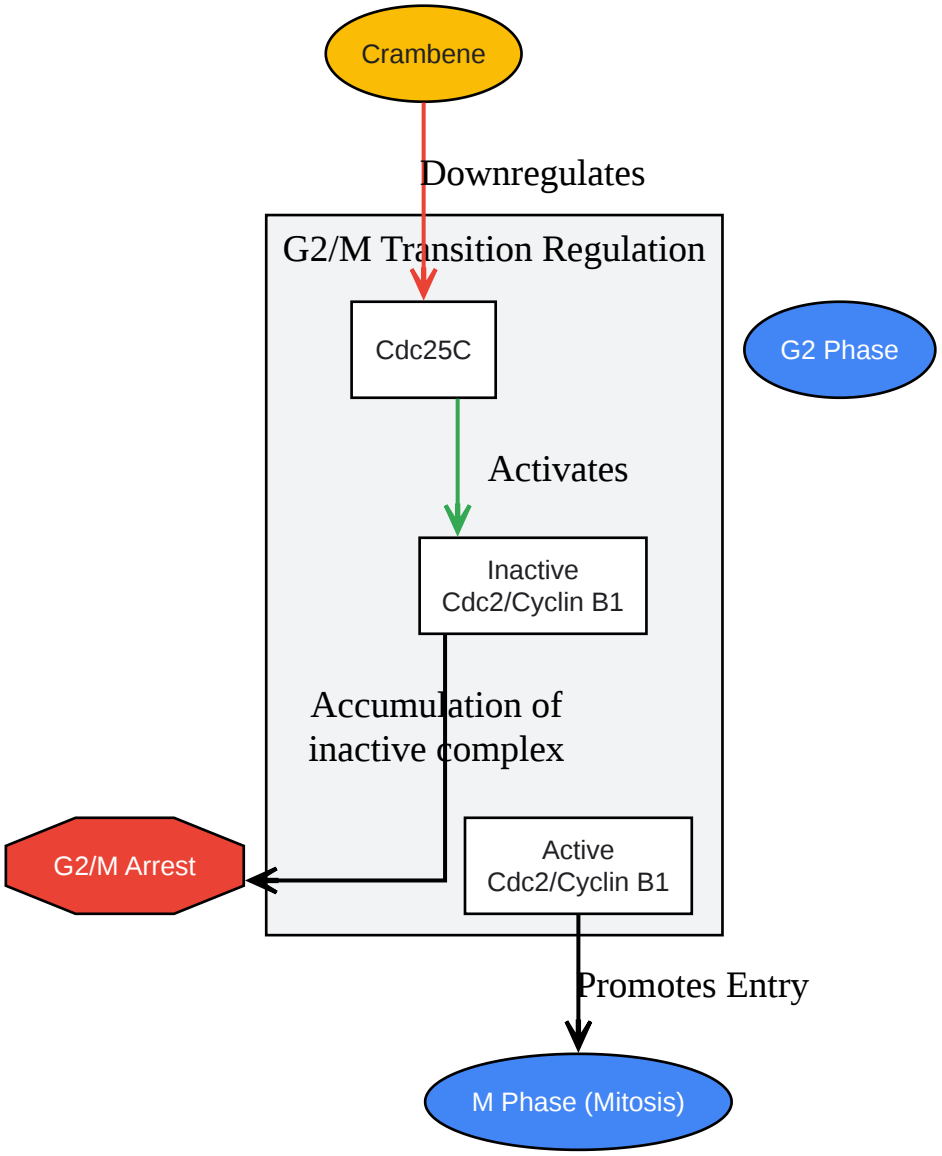

Click to download full resolution via product page

Hypothesized **crambene**-induced G2/M cell cycle arrest.

Quantitative Data

While specific dose-response data for **crambene** in tabular format is not readily available in the reviewed literature, the following tables represent the types of quantitative data that would be generated to characterize its bioactivity. The values are illustrative and based on qualitative descriptions found in the literature, such as the observation that **crambene** is approximately 100-fold less potent than sulforaphane in cell culture.

© 2026 BenchChem. All rights reserved.

Table 1: Representative Dose-Response of **Crambene** on Quinone Reductase Activity in HepG2 Cells

Crambene Concentration (μM)	Fold Induction of QR Activity (Mean ± SD)
0 (Vehicle Control)	1.0 ± 0.1
10	1.2 ± 0.2
50	1.8 ± 0.3
100	2.5 ± 0.4
200	3.1 ± 0.5
400	2.8 ± 0.4

Table 2: Representative Effect of **Crambene** on Cell Cycle Distribution in a Cancer Cell Line

Treatment	% Cells in G0/G1 Phase	% Cells in S Phase	% Cells in G2/M Phase
Vehicle Control	55	25	20
Crambene (100 μM)	40	15	45
Crambene (200 μM)	30	10	60

Experimental Protocols

The following are detailed methodologies for key experiments used to investigate the signaling pathways of **crambene**.

Quinone Reductase (QR) Activity Assay

This protocol is adapted for a 96-well plate format for high-throughput analysis.

Materials:

- HepG2 cells

© 2026 BenchChem. All rights reserved.

- Cell culture medium (e.g., DMEM with 10% FBS)
- **Crambene** stock solution (in DMSO)
- Lysis buffer (e.g., 0.8% digitonin in 2 mM EDTA)
- Reaction mixture:
  - 25 mM Tris-HCl (pH 7.4)
  - 0.67 mg/mL BSA
  - 5 µM FAD
  - 1 mM Glucose-6-phosphate
  - 2 U/mL Glucose-6-phosphate dehydrogenase
  - 30 µM NADP+
  - 50 µM Menadione
  - 0.2 mM MTT (3-(4,5-dimethylthiazol-2-yl)-2,5-diphenyltetrazolium bromide)
- 96-well microplates
- Microplate reader

Procedure:

- Cell Seeding and Treatment:
  - Seed HepG2 cells in a 96-well plate at a density of 1 x 10^4 cells/well.
  - Allow cells to adhere for 24 hours.
  - Treat cells with various concentrations of **crambene** (and a vehicle control) for 24-48 hours.

© 2026 BenchChem. All rights reserved.

- Cell Lysis:
  - Aspirate the culture medium.
  - Add 50 µL of lysis buffer to each well and incubate for 10 minutes at 37°C.
- Enzyme Assay:
  - Add 200 µL of the reaction mixture to each well.
  - Measure the absorbance at 610 nm at multiple time points (e.g., every 2 minutes for 10 minutes) using a microplate reader.
- Data Analysis:
  - Calculate the rate of change in absorbance over time for each well.
  - Normalize the QR activity to the protein concentration in each well (can be determined by a separate protein assay like BCA).
  - Express the results as fold induction relative to the vehicle control.

© 2026 BenchChem. All rights reserved.

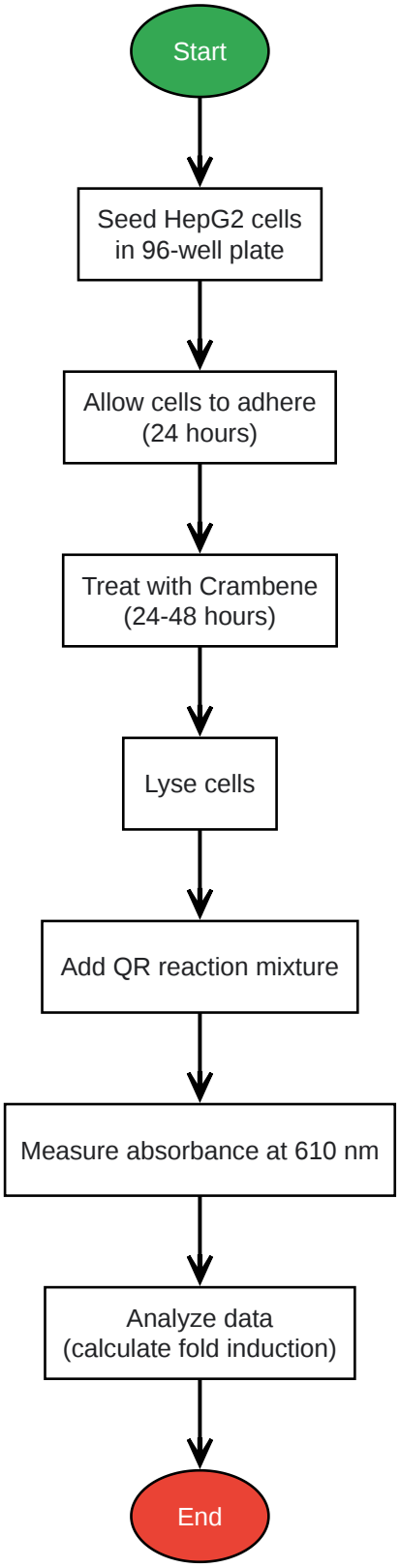

Click to download full resolution via product page

Workflow for Quinone Reductase Activity Assay.

© 2026 BenchChem. All rights reserved.

Nrf2 Nuclear Translocation by Immunofluorescence

This protocol allows for the visualization of Nrf2 movement from the cytoplasm to the nucleus.

Materials:

- Cells grown on glass coverslips
- **Crambene** stock solution
- Phosphate-buffered saline (PBS)
- 4% Paraformaldehyde (PFA) in PBS
- Permeabilization buffer (e.g., 0.25% Triton X-100 in PBS)
- Blocking buffer (e.g., 1% BSA in PBS)
- Primary antibody against Nrf2
- Fluorescently labeled secondary antibody
- DAPI (for nuclear counterstaining)
- Mounting medium
- Fluorescence microscope

Procedure:

- Cell Culture and Treatment:
  - Grow cells on glass coverslips in a petri dish.
  - Treat cells with **crambene** for the desired time (e.g., 1-4 hours).
- Fixation and Permeabilization:
  - Wash cells with PBS.

© 2026 BenchChem. All rights reserved.

- Fix with 4% PFA for 15 minutes at room temperature.
- Wash with PBS.
- Permeabilize with permeabilization buffer for 10 minutes.

- Immunostaining:
  - Wash with PBS.
  - Block with blocking buffer for 1 hour at room temperature.
  - Incubate with primary anti-Nrf2 antibody (diluted in blocking buffer) overnight at 4°C.
  - Wash with PBS.
  - Incubate with fluorescently labeled secondary antibody (diluted in blocking buffer) for 1 hour at room temperature in the dark.
- Counterstaining and Mounting:
  - Wash with PBS.
  - Stain with DAPI for 5 minutes.
  - Wash with PBS.
  - Mount the coverslip onto a microscope slide with mounting medium.
- Imaging:
  - Visualize and capture images using a fluorescence microscope.

Cell Cycle Analysis by Flow Cytometry

This protocol quantifies the distribution of cells in different phases of the cell cycle.

Materials:

© 2026 BenchChem. All rights reserved.

- Treated and control cells
- PBS
- 70% Ethanol (ice-cold)
- Propidium Iodide (PI) staining solution (containing RNase A)
- Flow cytometer

Procedure:

- Cell Harvesting and Fixation:
  - Harvest cells (including any floating cells) and wash with PBS.
  - Resuspend the cell pellet in a small volume of PBS.
  - While vortexing gently, add ice-cold 70% ethanol dropwise to fix the cells.
  - Incubate on ice for at least 30 minutes (or store at -20°C).
- Staining:
  - Centrifuge the fixed cells and discard the ethanol.
  - Wash the cell pellet with PBS.
  - Resuspend the cells in PI staining solution.
  - Incubate for 30 minutes at room temperature in the dark.
- Flow Cytometry:
  - Analyze the stained cells on a flow cytometer, measuring the fluorescence intensity of the PI signal.
- Data Analysis:

© 2026 BenchChem. All rights reserved.

- Use cell cycle analysis software to deconvolute the DNA content histogram and determine the percentage of cells in the G0/G1, S, and G2/M phases.

Conclusion

Crambene presents a compelling profile as a bioactive compound with potential applications in chemoprevention and cancer therapy. Its primary mechanisms of action in mammalian cells involve the robust activation of the Nrf2-mediated antioxidant response and the induction of G2/M cell cycle arrest. While the precise molecular interactions of **crambene** are still under investigation, the signaling pathways outlined in this guide provide a solid foundation for further research. The provided experimental protocols offer standardized methods to quantify the effects of **crambene** and to further elucidate its molecular targets. Future studies should focus on obtaining detailed quantitative data for **crambene**'s effects and on confirming the hypothesized mechanisms of action, particularly in the context of its influence on cell cycle regulatory proteins. Such research will be crucial for the translation of **crambene**'s promising preclinical bioactivity into tangible therapeutic strategies.

Need Custom Synthesis?

BenchChem offers custom synthesis for rare earth carbides and specific isotopiclabeling.

Email: info@benchchem.com or Request Quote Online.

References

- 1. Crambene, a bioactive nitrile derived from glucosinolate hydrolysis, acts via the antioxidant response element to upregulate quinone reductase alone or synergistically with indole-3-carbinol - PubMed [pubmed.ncbi.nlm.nih.gov]
- To cite this document: BenchChem. [Crambene Signaling Pathways in Mammalian Cells: An In-depth Technical Guide]. BenchChem, [2026]. [Online PDF]. Available at: [https://www.benchchem.com/product/b1669600/docs#crambene-signaling-pathways-in-mammalian-cells-an-in-depth-technical-guide]

Disclaimer & Data Validity:

The information provided in this document is for Research Use Only (RUO) and is strictly not intended for diagnostic or therapeutic procedures. While BenchChem strives to provide accurate protocols, we make no warranties, express or implied, regarding the fitness of this product for every specific experimental setup.

Technical Support: The protocols provided are for reference purposes. Unsure if this reagent suits your experiment?

Need Industrial/Bulk Grade? Request Custom Synthesis Quote

BenchChem

Our mission is to be the trusted global source of essential and advanced chemicals, empowering scientists and researchers to drive progress in science and industry.

Contact

Address: 3281 E Guasti Rd

Ontario, CA 91761, United States

Phone: (601) 213-4426

Email: info@benchchem.com

Contact our Ph.D. Support Team for a compatibility check

© 2026 BenchChem. All rights reserved.