Technical Deep Dive: CCK-5 vs. CCK-8 Receptor Binding Dynamics

Author: BenchChem Technical Support Team. **Date**: May 2026

Compound of Interest

Compound Name:	*Cholecystokinin pentapeptide*
CAS No.:	*18917-24-3*
Cat. No.:	*B1668896*

Get Quote

Executive Summary

The cholecystokinin (CCK) receptor system represents a critical pharmacological target for metabolic, gastrointestinal, and neuropsychiatric disorders. The functional dichotomy of this system relies on the differential recognition of peptide ligands by two G-protein-coupled receptors (GPCRs): CCK1 (CCK-A) and CCK2 (CCK-B).

This guide provides a rigorous technical comparison between CCK-8 (the predominant neuronal/gut octapeptide) and CCK-5 (the C-terminal pentapeptide fragment). The core distinction lies in the sulfation-dependent selectivity of CCK1, contrasted with the broad-spectrum affinity of CCK2. While CCK-8 (sulfated) acts as a high-affinity universal agonist, CCK-5 functions as a highly selective CCK2 agonist with negligible activity at CCK1, making it a vital tool for dissecting receptor-specific signaling.

Molecular Identities & Structural Basis

To understand binding affinity, one must first define the structural pharmacophores.

© 2026 BenchChem. All rights reserved.

Peptide Sequences[1][2][3]

- CCK-8s (Sulfated): Asp-Tyr(SO3H)-Met-Gly-Trp-Met-Asp-Phe-NH_2[1][2][3]
  - Key Feature: Sulfated Tyrosine at position 7 (from C-terminus).[4] This moiety is the "key" that unlocks the CCK1 receptor.
- CCK-5 (Pentagastrin fragment): Gly-Trp-Met-Asp-Phe-NH_2[4][2][3][5]
  - Key Feature: Contains the minimal bioactive tetrapeptide (WMDF-NH_2) required for CCK2 activation but lacks the N-terminal sulfated tyrosine.

The Selectivity Switch

The CCK1 receptor possesses a specific binding pocket (involving residues in the extracellular loops) that strictly requires the anionic sulfate group of Tyr(SO3H) for high-affinity binding. CCK2, however, evolved to recognize the C-terminal Trp-Met-Asp-Phe-NH_2 sequence, rendering it less sensitive to N-terminal extensions or sulfation.

Receptor Binding Affinity Comparison

The following data summarizes

(inhibition constant) values derived from competitive radioligand binding assays. These values represent the concentration of ligand required to displace 50% of a radiotracer (typically [^{125}I]-CCK-8s).

Table 1: Comparative Binding Affinities (in nM)

© 2026 BenchChem. All rights reserved.

Ligand	CCK1 Receptor (Alimentary)	CCK2 Receptor (Brain/Gastrin)	Selectivity Profile
CCK-8s	0.2 – 0.5 nM	0.1 – 0.8 nM	Non-selective High Affinity
CCK-8ns (Non-sulfated)	> 500 nM	1.0 – 5.0 nM	CCK2 Selective
CCK-5 (GWMDF-NH_2)	> 1,000 nM	2.0 – 10.0 nM	Highly CCK2 Selective
CCK-4	> 10,000 nM	5.0 – 20.0 nM	CCK2 Selective

Technical Insight:

- CCK1: CCK-5 exhibits >2000-fold lower affinity compared to CCK-8s. It is effectively inert at physiological concentrations.
- CCK2: CCK-5 retains high nanomolar affinity, only slightly weaker (2-10x) than CCK-8s. This confirms that the N-terminal extension of CCK-8 contributes minimally to CCK2 binding energy.

Visualizing Receptor Selectivity Logic

The following diagram illustrates the logical gates determining receptor activation based on ligand structure.

© 2026 BenchChem. All rights reserved.

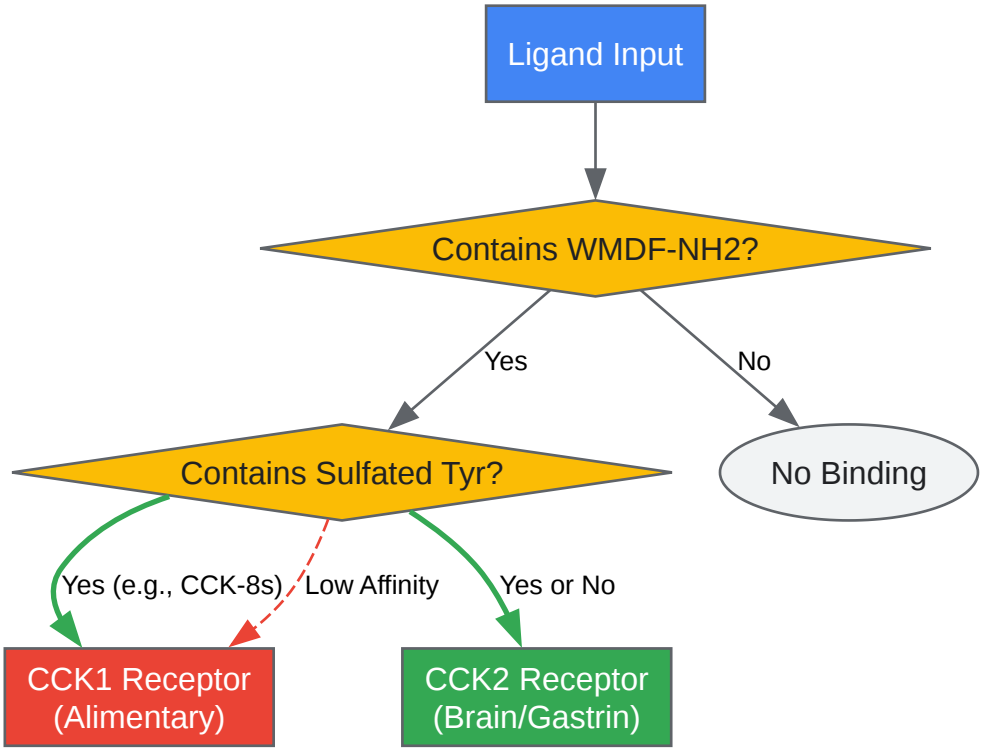

Click to download full resolution via product page

Figure 1: Decision logic for CCK receptor activation. CCK1 acts as an "AND" gate requiring both the C-terminal sequence AND sulfation.

Experimental Protocol: Radioligand Binding Assay

To validate the affinity differences between CCK-5 and CCK-8, a competitive binding assay is the gold standard.

Reagents & Setup

- Receptor Source: HEK293 or CHO cells stably transfected with human CCK1 (CCKAR) or CCK2 (CCKBR).
- Radioligand: [^{125}I]-CCK-8s (Specific Activity ~2000 Ci/mmol). Note: Do not use tritiated CCK-5 due to stability issues; displace the iodinated standard.
- Buffer: 50 mM Tris-HCl (pH 7.4), 5 mM $MgCl_2$, 1 mM EGTA, 0.2% BSA (to prevent peptide adsorption), and Bacitracin (0.5 mg/mL) to inhibit peptidases.

© 2026 BenchChem. All rights reserved.

Step-by-Step Workflow

- Membrane Preparation: Harvest cells, homogenize in ice-cold buffer, and centrifuge (40,000 x g) to isolate membrane fractions. Resuspend to a protein concentration of 10–20 µ g/well .
- Competition Setup:
  - Total Binding: Membrane + [^{125}I]-CCK-8s (20 pM).
  - Non-Specific Binding (NSB): Add excess unlabeled CCK-8s (1 µM).
  - Experimental Arms: Add increasing concentrations of CCK-5 (

    M to

    M).
- Incubation: Incubate for 60 minutes at 25°C. Equilibrium must be reached.
- Termination: Rapid filtration through GF/B glass fiber filters (pre-soaked in 0.3% polyethyleneimine to reduce non-specific binding).
- Quantification: Count filter-bound radioactivity using a gamma counter.
- Data Analysis: Plot % Specific Binding vs. Log[Ligand]. Fit to a one-site competition model to determine

  and calculate

  using the Cheng-Prusoff equation.[6]

© 2026 BenchChem. All rights reserved.

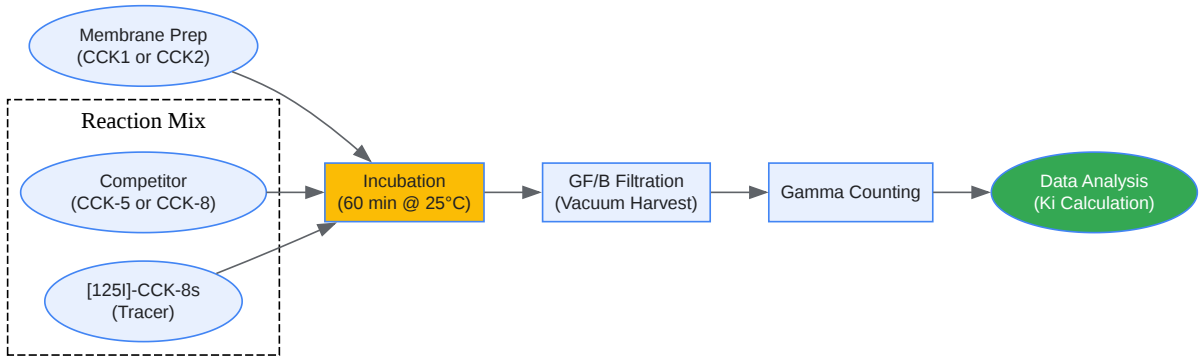

Click to download full resolution via product page

Figure 2: Workflow for competitive radioligand binding assay to determine Ki values.

Functional Implications & Signaling[8][9]

Binding is only the first step. Both CCK-5 and CCK-8 trigger intracellular cascades upon binding to their respective high-affinity receptors.

- G-Protein Coupling: Both CCK1 and CCK2 primarily couple to Gαq/11.
- Pathway: Activation of Phospholipase C (PLC)

  Hydrolysis of PIP_2

  IP_3 + DAG

  Calcium Mobilization + PKC activation.
- Differentiation: While the signaling pathway is identical, the tissue distribution dictates the effect.
  - CCK-8 (via CCK1): Stimulates pancreatic enzyme secretion and gallbladder contraction.

© 2026 BenchChem. All rights reserved.

- CCK-5 (via CCK2): Stimulates gastric acid secretion (stomach) and anxiety/panic behaviors (brain).

Self-Validating Check: If you treat pancreatic acini (rich in CCK1) with nanomolar CCK-5, you should see no calcium flux. If you see flux, your CCK-5 is contaminated with CCK-8, or the cells express CCK2.

References

- Dufresne, M., et al. (2006). Cholecystokinin and Gastrin Receptors.[1][7][8][9][10] Physiological Reviews. Link
- Noble, F., & Roques, B. P. (1999). CCK-B receptor: chemistry, molecular biology, biochemistry and pharmacology. Progress in Neurobiology. Link
- Reeve, J. R., et al. (2003). CCK-58 and CCK-8 disrupt CCK1 receptor oligomerization. (Contextualizing peptide forms). Link
- Reaction Biology. (2023). CCK1 Biochemical Binding Assay Protocol.Link
- Gifford Bioscience. (2023). Radioligand Binding Assay Protocols for GPCRs.Link

Need Custom Synthesis?

BenchChem offers custom synthesis for rare earth carbides and specific isotopiclabeling.

Email: info@benchchem.com or Request Quote Online.

Sources

- 1. repository.ubn.ru.nl [repository.ubn.ru.nl]
- 2. atsbio.com [atsbio.com]
- 3. avmajournals.avma.org [avmajournals.avma.org]
- 4. ovid.com [ovid.com]
- 5. CCK-5: sequence analysis of a small cholecystokinin from canine brain and intestine - PubMed [pubmed.ncbi.nlm.nih.gov]

- 6. researchgate.net [researchgate.net]
- 7. Cholecystokinin B receptor - Wikipedia [en.wikipedia.org]
- 8. Identification and characterization of CCK-B/gastrin receptors in human pancreatic cancer cell lines - PubMed [pubmed.ncbi.nlm.nih.gov]
- 9. Binding specificity of the mouse cerebral cortex receptor for small cholecystokinin peptides - PubMed [pubmed.ncbi.nlm.nih.gov]
- 10. Distinguishing Multiple CCK Receptor Subtypes: Studies with Guinea Pig Chief Cells and Transfected Human CCK Receptors - PMC [pmc.ncbi.nlm.nih.gov]

- To cite this document: BenchChem. [Technical Deep Dive: CCK-5 vs. CCK-8 Receptor Binding Dynamics]. BenchChem, [2026]. [Online PDF]. Available at: [https://www.benchchem.com/product/b1668896/docs#technical-deep-dive-cck-5-vs-cck-8-receptor-binding-dynamics]

Disclaimer & Data Validity:

The information provided in this document is for Research Use Only (RUO) and is strictly not intended for diagnostic or therapeutic procedures. While BenchChem strives to provide accurate protocols, we make no warranties, express or implied, regarding the fitness of this product for every specific experimental setup.

Technical Support: The protocols provided are for reference purposes. Unsure if this reagent suits your experiment?

Need Industrial/Bulk Grade? Request Custom Synthesis Quote

BenchChem

Our mission is to be the trusted global source of essential and advanced chemicals, empowering scientists and researchers to drive progress in science and industry.

Contact

Address: 3281 E Guasti Rd

Ontario, CA 91761, United States

Phone: (601) 213-4426

Email: info@benchchem.com

Contact our Ph.D. Support Team for a compatibility check

© 2026 BenchChem. All rights reserved.