Technical Guide: Formation and Control of Atorvastatin Diastereomers

Author: BenchChem Technical Support Team. **Date**: May 2026

Compound of Interest

Compound Name:	*Atorvastatin, (3S,5R)-*
CAS No.:	*887324-52-9*
Cat. No.:	*B1667682*

Get Quote

Executive Summary: The Stereochemical Challenge

Atorvastatin Calcium is a synthetic HMG-CoA reductase inhibitor containing two chiral centers at the C3 and C5 positions of the heptanoic acid side chain. The pharmacological activity resides exclusively in the (3R, 5R) stereoisomer.

During synthesis, three stereoisomeric impurities (diastereomers and enantiomer) can form, significantly impacting yield and regulatory compliance (ICH Q3A/Q3B).[1]

- (3R, 5R): Active Pharmaceutical Ingredient (API).[1]
- (3S, 5S): Enantiomer (Impurity E).[1][2]
- (3R, 5S) & (3S, 5R): Diastereomers (Impurity B).[1][2]

This guide dissects the Narasaka-Prasad reduction, the critical stereodefining step in the synthesis of the chiral side chain (ATS-9), and analyzes the Paal-Knorr convergence where these impurities are locked into the final structure.

© 2026 BenchChem. All rights reserved.

Synthetic Architecture & Stereogenesis

The industrial synthesis of Atorvastatin typically follows a convergent route (Paal-Knorr synthesis) involving two key fragments:

- The 1,4-Diketone: 4-fluoro-

  -(2-methyl-1-oxopropyl)-

  -oxo-

  ,

  -diphenylbenzenebutanamide.[1][3]
- The Chiral Amine (ATS-9): A protected side chain, typically (4R,6R)-tert-butyl-6-(2-aminoethyl)-2,2-dimethyl-1,3-dioxane-4-acetate.[1]

The stereochemistry is established during the synthesis of the ATS-9 fragment, specifically during the reduction of a

-hydroxy ketone intermediate to a syn-1,3-diol.

The Critical Stereodefining Step (Narasaka-Prasad Reduction)

The formation of the (3R, 5R) configuration relies on the syn-selective reduction of a

-hydroxy ketone using sodium borohydride (

) complexed with a dialkylborane chelating agent (e.g., diethylmethoxyborane,

).

Mechanism of Diastereomer Formation

The reaction proceeds via a cyclic boron-chelated transition state.

- Correct Pathway (Syn-Directing): The boron atom coordinates with both the C5-hydroxyl oxygen and the C3-ketone oxygen, forming a rigid 6-membered chair-like transition state. The hydride from

© 2026 BenchChem. All rights reserved.

attacks intermolecularly from the less hindered face, yielding the syn-diol (3R, 5R).

- Failure Mode (Anti-Formation): If chelation is disrupted (e.g., by moisture, incorrect temperature, or insufficient boron reagent), the reaction reverts to a standard hydride reduction governed by Felkin-Anh control or steric factors, often favoring the thermodynamically stable anti-isomer (3R, 5S).

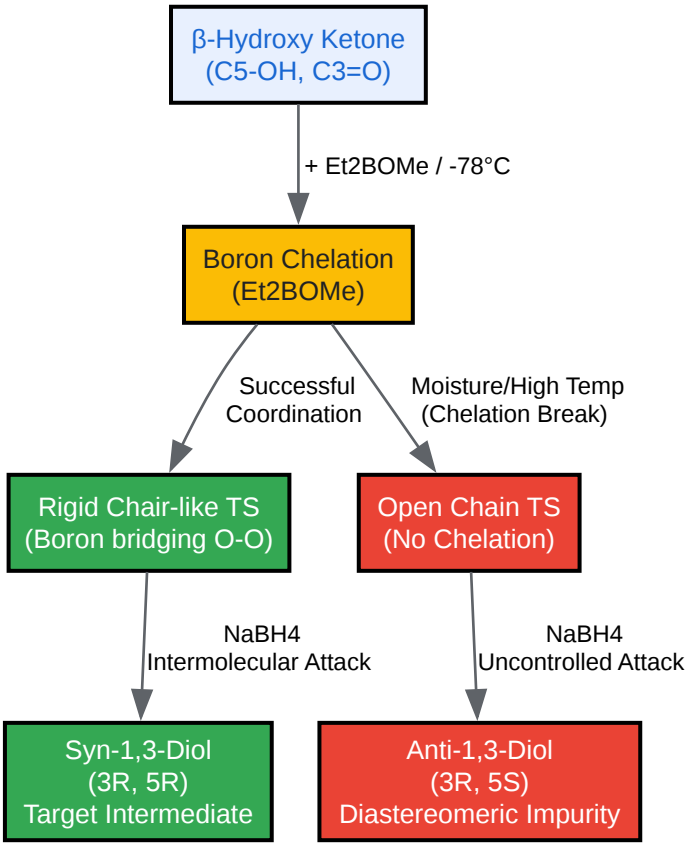

Click to download full resolution via product page

Figure 1: Mechanistic bifurcation during the side-chain reduction. Successful boron chelation enforces the syn-geometry required for Atorvastatin.

Impurity Profile & Analytical Characterization

Once the Paal-Knorr reaction occurs, the stereochemistry is fixed. It is virtually impossible to correct the stereochemistry after this step; therefore, control of the starting amine (ATS-9) is paramount.

© 2026 BenchChem. All rights reserved.

Diastereomer Classification (EP/USP Standards)

Impurity Name	Structure	Configuration	Origin
Atorvastatin (API)	(3R, 5R)	Syn-diol	Desired Product
Impurity E	(3S, 5S)	Syn-diol (Enantiomer)	Use of wrong starting chiral pool or racemic resolution failure.[1]
Impurity B	(3R, 5S)	Anti-diol	Failure of Narasaka-Prasad chelation (Partial reduction failure).[1]
Impurity B (isomer)	(3S, 5R)	Anti-diol	Epimerization of C3 or C5; less common in boron reduction.[1]

HPLC Separation Strategy

Separating diastereomers requires high-resolution reverse-phase chromatography or chiral stationary phases.[1]

- Column: Chiralcel OD-RH or Chiralpak AD-H (Cellulose/Amylose derivatives).[1]
- Mobile Phase: n-Hexane : Ethanol : TFA (variable ratios, e.g., 90:10:0.1).[1]
- Detection: UV @ 254 nm.[1]
- Critical Resolution: The (3R, 5S) diastereomer often elutes close to the main peak in non-chiral systems.

Experimental Protocol: Syn-Selective Reduction

Objective: Synthesis of the syn-1,3-diol intermediate with >98% diastereomeric excess (de).
Context: This protocol describes the reduction of the 5-hydroxy-3-keto ester precursor.

Reagents

© 2026 BenchChem. All rights reserved.

- Substrate:tert-Butyl (S)-6-chloro-5-hydroxy-3-oxohexanoate (1.0 eq).
- Chelating Agent: Diethylmethoxyborane (

) (1.1 eq) or Triethylborane.[1]
- Reducing Agent: Sodium Borohydride (

) (1.1 eq).[1]
- Solvent: Anhydrous THF (Tetrahydrofuran) and Methanol.[1]

Step-by-Step Methodology

- Chelation Formation:
  - Dissolve the substrate in anhydrous THF under nitrogen atmosphere.
  - Cool the solution to -78°C (Dry ice/acetone bath).
  - Add

    dropwise.[1]
  - Mechanism Check: Stir for 30 minutes at -78°C. This allows the boron to coordinate with the C5-hydroxyl and C3-carbonyl, forming the cyclic template.
- Stereoselective Reduction:
  - Add

    in portions.
  - Maintain temperature strictly below -70°C.
  - Critical Control: Higher temperatures increase conformational mobility, leading to anti (Impurity B) formation.[1]
- Quenching & Boron Removal:

© 2026 BenchChem. All rights reserved.

- Quench with acetic acid at low temperature.[1]
- Add methanol and warm to room temperature.[1]
- Azeotropic Distillation: Concentrate the mixture and repeat methanol addition/evaporation 3-4 times. This breaks the boron-diol complex by forming volatile trimethyl borate (

).[1]
- Failure to remove boron prevents crystallization and complicates subsequent protection steps.

- Purification:
  - The resulting syn-diol is typically protected as an acetonide (using 2,2-dimethoxypropane) before the Paal-Knorr step.

Paal-Knorr Convergence & Final Risks

The final assembly involves reacting the chiral amine with the 1,4-diketone.

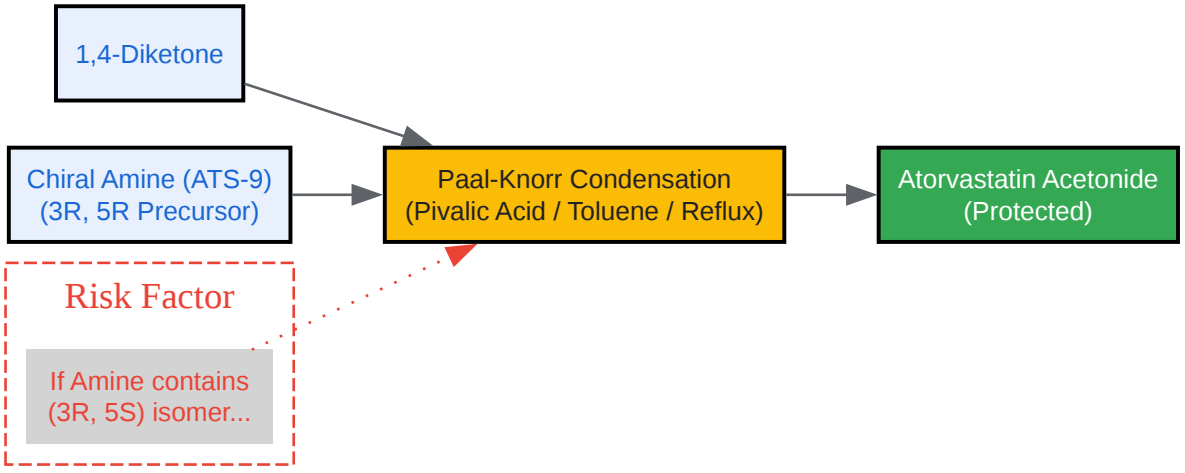

Click to download full resolution via product page

Figure 2: The Paal-Knorr convergence. The stereochemical integrity of the final drug is entirely dependent on the purity of the Chiral Amine input.

© 2026 BenchChem. All rights reserved.

Acid-Induced Epimerization

During the final deprotection (removal of acetonide and tert-butyl ester) using acid (e.g., HCl):

- Lactonization: The acid catalyzes the formation of Atorvastatin Lactone.
- Risk: The lactone ring opening is generally stereospecific, but prolonged exposure to strong acid or heat can lead to epimerization at C3, increasing Impurity B levels.

References

- Synthesis and Impurity Profiling
  - Stach, J., et al. (2025).[1][4] Synthesis of Some Impurities and/or Degradation Products of Atorvastatin. ResearchGate. Link
- HPLC Separation Methods
  - Mediterranean Journal of Pharmacy and Pharmaceutical Sciences.[1] (2024).[1][2][5] Chiral screening approach of atorvastatin diastereomers by HPLC method. Link
- Mechanistic Insights (Boron Reduction)
  - BenchChem. (2025).[1] An In-Depth Technical Guide to the Synthesis of Atorvastatin Ethyl Ester. Link[1]
- Pharmacopoeial Standards
  - MilliporeSigma.[1] Atorvastatin Related Compound D Pharmaceutical Secondary Standard. Link
- General Statin Synthesis Reviews
  - Li, S.F., et al. (2024).[1][6][7] Recent Advances in the Synthesis and Analysis of Atorvastatin and its Intermediates. Bentham Science.[1][7] Link

© 2026 BenchChem. All rights reserved.

Need Custom Synthesis?

BenchChem offers custom synthesis for rare earth carbides and specific isotopiclabeling.

Email: info@benchchem.com or Request Quote Online.

Sources

- 1. Atorvastatin Related Compound D Pharmaceutical Secondary Standard; Certified Reference Material 148146-51-4 [sigmaaldrich.com]
- 2. Improving the Current European Pharmacopoeia Enantio-Selective HPLC Method for the Determination of Enantiomeric Purity in Atorvastatin Calcium Salt Drug Substance [mdpi.com]
- 3. pdf.benchchem.com [pdf.benchchem.com]
- 4. researchgate.net [researchgate.net]
- 5. medjpps.com [medjpps.com]
- 6. researchgate.net [researchgate.net]
- 7. Recent Advances in the Synthesis and Analysis of Atorvastatin and its Intermediates - Li - Current Medicinal Chemistry [edgccjournal.org]

- To cite this document: BenchChem. [Technical Guide: Formation and Control of Atorvastatin Diastereomers]. BenchChem, [2026]. [Online PDF]. Available at: [https://www.benchchem.com/product/b1667682/docs#technical-guide-formation-and-control-of-atorvastatin-diastereomers]

Disclaimer & Data Validity:

The information provided in this document is for Research Use Only (RUO) and is strictly not intended for diagnostic or therapeutic procedures. While BenchChem strives to provide accurate protocols, we make no warranties, express or implied, regarding the fitness of this product for every specific experimental setup.

Technical Support: The protocols provided are for reference purposes. Unsure if this reagent suits your experiment?

Need Industrial/Bulk Grade? Request Custom Synthesis Quote

© 2026 BenchChem. All rights reserved.

BenchChem

Our mission is to be the trusted global source of essential and advanced chemicals, empowering scientists and researchers to drive progress in science and industry.

Contact

Address: 3281 E Guasti Rd

Ontario, CA 91761, United States

Phone: (601) 213-4426

Email: info@benchchem.com

Contact our Ph.D. Support Team for a compatibility check

© 2026 BenchChem. All rights reserved.