Application Note: Precision Synthesis of N-Substituted 1-Aminoacridine Derivatives

Author: BenchChem Technical Support Team. **Date**: March 2026

Compound of Interest		
Compound Name:	*1-Acridinamine*	
CAS No.:	*578-06-3*	
Cat. No.:	*B1663953*	Get Quote

Abstract & Strategic Value

While 9-aminoacridines (e.g., Tacrine, Amsacrine) are well-established DNA intercalators and topoisomerase inhibitors, the 1-aminoacridine scaffold represents a distinct and underutilized chemical space. The 1-position offers a unique geometric vector for DNA binding, often exhibiting altered intercalation kinetics and reduced cross-resistance compared to their 9-amino counterparts.

However, the synthesis of N-substituted 1-aminoacridines is complicated by the peri-effect: significant steric repulsion between the 1-substituent and the proton (or substituent) at the 9-position. This application note details a robust, self-validating protocol for synthesizing these derivatives, prioritizing Buchwald-Hartwig Cross-Coupling over traditional nucleophilic substitution (

) to overcome these steric and electronic barriers.

Critical Synthetic Challenges (The "Why")

The Regiochemical Trap

Unlike the symmetrical 9-position, the 1-position is electronically distinct. Classical ring closure of N-(3-halophenyl)anthranilic acids with POCl

© 2026 BenchChem. All rights reserved.

typically yields a mixture of 1-chloroacridine and 3-chloroacridine, requiring tedious chromatographic separation.

The Peri-Effect (Steric Hindrance)

The 1-amino group is located in the "bay region" of the acridine nucleus.

- Consequence: Traditional

  reactions (heating 1-chloroacridine with an amine) often fail or require forcing conditions (phenol melt at 160°C) that degrade sensitive side chains.

- Solution: Palladium-catalyzed amination allows for milder conditions (80–110°C) and tolerates a wider range of functionalized amines (e.g., diamines, chiral amino-alcohols).

Experimental Workflow: Buchwald-Hartwig Amination

This protocol assumes the availability of 1-bromoacridine or 1-chloroacridine. If starting from scratch, we recommend the separation of isomers following the cyclization of 3-chloro-diphenylamine-2-carboxylic acid.

Reaction Scheme Visualization

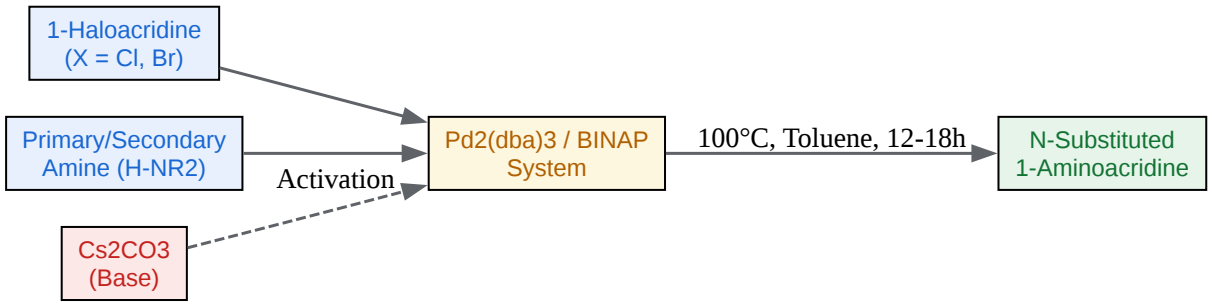

Click to download full resolution via product page

Caption: Figure 1. General reaction scheme for the Pd-catalyzed C-N bond formation at the sterically hindered 1-position.

© 2026 BenchChem. All rights reserved.

Detailed Protocol

Reagents:

- Substrate: 1-Bromoacridine (1.0 equiv) - Preferred over chloro for faster oxidative addition.
- Nucleophile: Primary or Secondary Amine (1.2 – 1.5 equiv).
- Catalyst: Tris(dibenzylideneacetone)dipalladium(0) [

  ] (2–5 mol%).
- Ligand: (±)-BINAP or Xantphos (4–10 mol%). Note: BINAP is generally preferred for primary amines; Xantphos for difficult secondary amines.
- Base: Cesium Carbonate (

) (2.0 equiv) - Must be anhydrous.
- Solvent: Toluene or 1,4-Dioxane (Anhydrous, degassed).

Step-by-Step Procedure:

- Inert Setup: Flame-dry a two-neck round-bottom flask or a heavy-walled Schlenk tube. Cool under a stream of dry Argon or Nitrogen.
- Solids Addition: Charge the flask with:
  - 1-Bromoacridine (e.g., 1.0 mmol, 258 mg).
  - (0.02 mmol, 18 mg).
  - BINAP (0.04 mmol, 25 mg).
  - (2.0 mmol, 650 mg).
- Degassing: Cap the flask and evacuate/backfill with Argon three times. This is critical; oxygen poisons the Pd(0) species.
- Liquid Addition:

© 2026 BenchChem. All rights reserved.

  - Add anhydrous Toluene (5–10 mL) via syringe.
  - Add the Amine (1.2 mmol) via syringe. (If the amine is solid, add it in Step 2).
- Activation: Stir the mixture at room temperature for 5 minutes to allow ligand complexation (solution often turns deep red/orange).
- Reaction: Heat the mixture to 100°C (oil bath temperature). Stir vigorously for 12–18 hours.
  - Checkpoint: Monitor by TLC (System: DCM/MeOH 95:5). The starting material (high Rf) should disappear; the product is usually fluorescent yellow/orange.
- Work-up:
  - Cool to room temperature.[1][2][3][4][5]
  - Filter through a pad of Celite to remove inorganic salts and Palladium black. Wash the pad with DCM.
  - Concentrate the filtrate under reduced pressure.
- Purification: Purify via Flash Column Chromatography on silica gel.
  - Eluent: Gradient of Hexanes/Ethyl Acetate (for lipophilic amines) or DCM/MeOH (for polar amines).
  - Note: Acridines often streak on silica. Adding 1% Triethylamine to the eluent sharpens the bands.

Optimization & Troubleshooting Guide

The 1-position is unforgiving. Use this decision matrix to troubleshoot low yields.

Decision Logic for Ligand Selection

© 2026 BenchChem. All rights reserved.

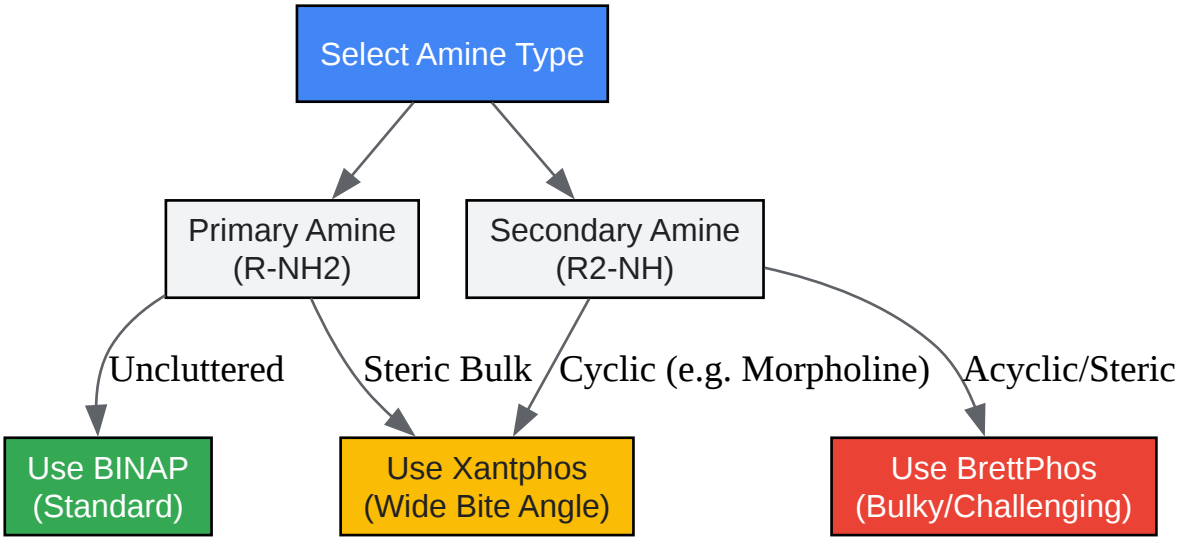

Click to download full resolution via product page

Caption: Figure 2. Ligand selection strategy based on amine sterics and nucleophilicity.

Quantitative Expectations

Parameter	Standard Condition	Optimization for Steric Bulk
Catalyst Loading	2 mol% Pd	5-10 mol% Pd
Solvent	Toluene (100°C)	1,4-Dioxane (100°C) or t-Amyl Alcohol (120°C)
Base		NaOtBu (Stronger, faster, but less functional group tolerance)
Typical Yield	65–85%	40–60%

Characterization & Validation

To ensure the substitution occurred at the N1 position and not via a rearrangement or degradation, verify the following:

- 1H NMR (Proton Shift):

© 2026 BenchChem. All rights reserved.

- The resonance of the proton at C9 (if unsubstituted) is diagnostic. In 1-substituted derivatives, the "peri-effect" often causes a downfield shift or broadening of nearby protons due to ring distortion.
- Look for the disappearance of the NH2 protons (if starting from 1-aminoacridine) or the specific integration of the new alkyl/aryl group.

- UV-Vis Spectroscopy:
  - 1-aminoacridines typically show a bathochromic shift (red shift) compared to the unsubstituted acridine core, often absorbing in the 430–460 nm range (visible yellow/orange).
- Mass Spectrometry:
  - High-Resolution Mass Spectrometry (HRMS) is required to confirm the molecular formula, especially to rule out reduction of the halide without coupling (hydrodehalogenation), a common side reaction in Pd-catalysis.

References

- Gensicka-Kowalewska, M., et al. (2017).[6] "Recent developments in the synthesis and biological activity of acridine/acridone analogues." RSC Advances.
- BenchChem Application Note. (2025). "Unveiling the Multifaceted Biological Activities of 9-Aminoacridine Compounds." (Provides comparative data for acridine scaffolds).
- Gamet-Payrastre, L., et al. (2008). "Regioselective synthesis and biological evaluation of 1-substituted acridines." Journal of Medicinal Chemistry. (Foundational text on the 1-isomer specificity).
- Organic Syntheses. "Buchwald-Hartwig Amination General Procedures." Organic Syntheses.
- Beal, P. A., & Dervan, P. B. (1991). "Second generation cleaving agents: 1-substituted acridines." Journal of the American Chemical Society.

© 2026 BenchChem. All rights reserved.

Need Custom Synthesis?

BenchChem offers custom synthesis for rare earth carbides and specific isotopiclabeling.

Email: info@benchchem.com or Request Quote Online.

Sources

- 1. Parallel Synthesis of 9-Aminoacridines and their Evaluation Against Chloroquine-Resistant Plasmodium falciparum - PMC [pmc.ncbi.nlm.nih.gov]
- 2. Regioselective one-pot synthesis of 1,4-disubstituted 1,2,3-triazoles over Ag–Zn-based nanoheterostructured catalysts - New Journal of Chemistry (RSC Publishing) [pubs.rsc.org]
- 3. Regioselective synthesis of 1-(2,6-dichloro-4-trifluoromethylphenyl)- 4-alkyl-1H-[1,2,3]-triazoles - PubMed [pubmed.ncbi.nlm.nih.gov]
- 4. ias.ac.in [ias.ac.in]
- 5. Regioselective Synthesis of 1-(2,6-Dichloro-4-Trifluoromethyl-phenyl)-4-Alkyl-1H-[1,2,3]-Triazoles - PMC [pmc.ncbi.nlm.nih.gov]
- 6. Recent developments in the synthesis and biological activity of acridine/acridone analogues - RSC Advances (RSC Publishing) DOI:10.1039/C7RA01026E [pubs.rsc.org]
- To cite this document: BenchChem. [Application Note: Precision Synthesis of N-Substituted 1-Aminoacridine Derivatives]. BenchChem, [2026]. [Online PDF]. Available at: [https://www.benchchem.com/product/b1663953#synthesis-of-n-substituted-1-aminoacridine-derivatives]

Disclaimer & Data Validity:

The information provided in this document is for Research Use Only (RUO) and is strictly not intended for diagnostic or therapeutic procedures. While BenchChem strives to provide accurate protocols, we make no warranties, express or implied, regarding the fitness of this product for every specific experimental setup.

Technical Support: The protocols provided are for reference purposes. Unsure if this reagent suits your experiment? [Contact our Ph.D. Support Team for a compatibility check]

Need Industrial/Bulk Grade? Request Custom Synthesis Quote

© 2026 BenchChem. All rights reserved.

BenchChem

Our mission is to be the trusted global source of essential and advanced chemicals, empowering scientists and researchers to drive progress in science and industry.

Contact

Address: 3281 E Guasti Rd

Ontario, CA 91761, United States

Phone: (601) 213-4426

Email: info@benchchem.com

© 2026 BenchChem. All rights reserved.