Probing the Inflammatory Axis: A Guide to P2Y6 Receptor Activation Assays

Author: BenchChem Technical Support Team. **Date**: May 2026

Compound of Interest

Compound Name:	*Disodium uridine 5'-diphosphate*
CAS No.:	*27821-45-0*
Cat. No.:	*B1662347*

Get Quote

Introduction: The P2Y6 Receptor - A Key Node in Inflammatory Signaling

The P2Y6 receptor (P2Y6R) is a G protein-coupled receptor (GPCR) that has emerged as a critical player in a spectrum of physiological and pathological processes, most notably in inflammation, immune responses, and neurodegeneration.[1][2] As a member of the purinergic P2Y receptor family, it is preferentially activated by the extracellular nucleotide uridine diphosphate (UDP).[1][3] This activation triggers a cascade of intracellular events that are pivotal in cellular communication and response to injury or stress. Understanding and modulating the activity of the P2Y6 receptor holds significant therapeutic promise for a range of inflammatory diseases, making robust and reliable activation assays indispensable for researchers and drug development professionals.[2][4]

This application note provides a comprehensive guide to performing P2Y6 receptor activation assays. We will delve into the underlying signaling mechanisms, present detailed, field-proven protocols for both a primary screening assay (Calcium Mobilization) and a confirmatory assay (IP-One), and offer insights into data interpretation and validation. The methodologies

© 2026 BenchChem. All rights reserved.

described herein are designed to be self-validating, ensuring the generation of accurate and reproducible data for agonist screening, antagonist characterization, and mechanistic studies.

The P2Y6 Signaling Cascade: A Gq-Coupled Pathway

The P2Y6 receptor primarily couples to the Gq/11 family of G proteins.[2] Upon agonist binding, a conformational change in the receptor activates the Gαq subunit, which in turn stimulates phospholipase Cβ (PLCβ).[2][5] PLCβ then hydrolyzes phosphatidylinositol 4,5-bisphosphate (PIP2) into two second messengers: inositol 1,4,5-trisphosphate (IP3) and diacylglycerol (DAG). IP3 diffuses through the cytoplasm and binds to its receptor on the endoplasmic reticulum, triggering the release of stored calcium (Ca2+) into the cytosol.[2][5] This rapid increase in intracellular calcium is a hallmark of P2Y6 receptor activation and serves as the basis for the widely used calcium mobilization assay.

Simultaneously, DAG activates protein kinase C (PKC), which phosphorylates a variety of downstream targets, contributing to diverse cellular responses. The IP3 is rapidly metabolized, eventually forming inositol monophosphate (IP1), a more stable metabolite. The accumulation of IP1 provides a robust and cumulative measure of Gq pathway activation, which is leveraged in the IP-One assay format.[6][7]

© 2026 BenchChem. All rights reserved.

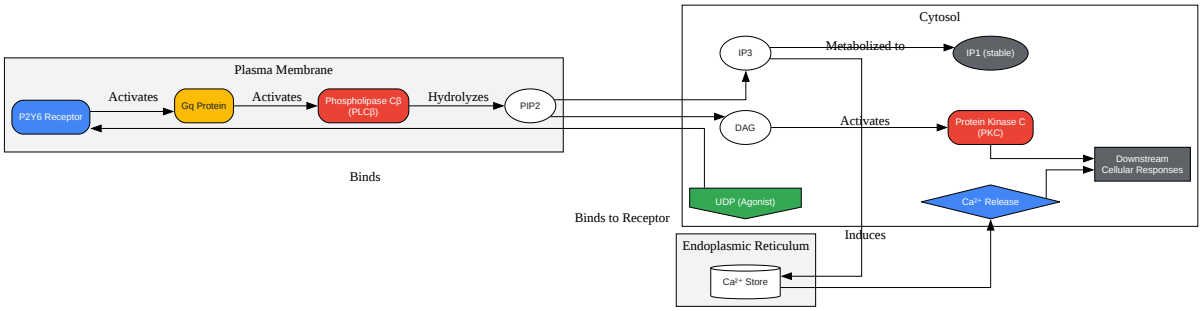

Click to download full resolution via product page

Caption: P2Y6 Receptor Signaling Pathway.

Experimental Design: A Two-Tiered Approach for Robust Validation

A robust screening campaign for P2Y6 modulators necessitates a multi-assay approach to minimize false positives and negatives.[8] We advocate for a two-tiered strategy:

- Primary Screening: A high-throughput calcium mobilization assay to rapidly identify potential agonists and antagonists. This assay captures the immediate, transient response to receptor activation.

- Confirmatory & Secondary Screening: An IP-One accumulation assay to confirm the activity of hits from the primary screen. This assay measures a more stable downstream signal,

© 2026 BenchChem. All rights reserved.

providing a time-integrated measure of receptor activation and reducing the likelihood of artifacts from compounds that interfere with calcium indicators.

This dual-assay workflow provides a self-validating system, as true P2Y6 receptor modulators should exhibit activity in both orthogonal assays.

© 2026 BenchChem. All rights reserved.

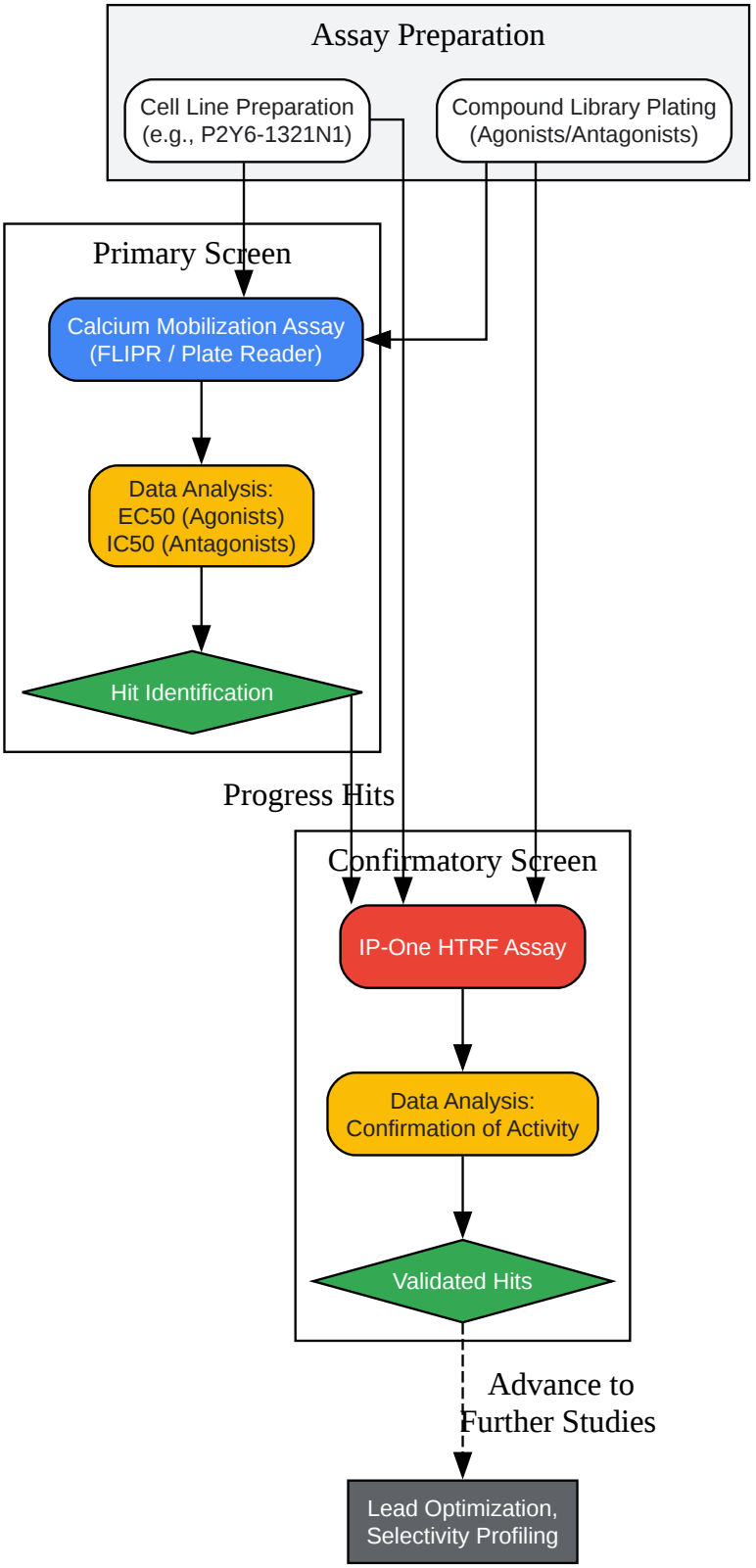

Click to download full resolution via product page

Caption: Two-tiered P2Y6R screening workflow.

© 2026 BenchChem. All rights reserved.

Protocol 1: High-Throughput Calcium Mobilization Assay

This protocol is optimized for a fluorescent plate reader (e.g., FLIPR, FlexStation) to measure the rapid increase in intracellular calcium following P2Y6 receptor activation.

Causality Behind Experimental Choices:

- Cell Line: Human astrocytoma 1321N1 cells are an excellent choice as they do not endogenously express most P2Y receptors, providing a "clean" background when stably transfected with the human P2Y6 receptor.[9] This minimizes off-target effects from other purinergic receptors.
- Calcium Indicator: Fluo-4 AM is a widely used, high-affinity calcium indicator that exhibits a large fluorescence increase upon binding Ca2+.[10] The AM ester group facilitates its loading into the cell, where intracellular esterases cleave it, trapping the active dye.
- Probenecid: This compound is an inhibitor of organic anion transporters in the cell membrane. Its inclusion is critical as it prevents the active efflux of the de-esterified calcium indicator dye from the cells, thereby improving signal stability and the assay window.

Materials and Reagents

© 2026 BenchChem. All rights reserved.

Reagent	Supplier	Purpose
P2Y6-expressing 1321N1 cells	In-house or Commercial	Host system for the assay
DMEM/F-12 Medium	Gibco	Cell culture medium
Fetal Bovine Serum (FBS)	Gibco	Cell culture supplement
Geneticin (G418)	Gibco	Selection agent for stable cell line
Fluo-4 AM Calcium Indicator	Invitrogen	Detects intracellular Ca2+
Probenecid	Sigma-Aldrich	Prevents dye leakage
UDP (disodium salt)	Sigma-Aldrich	P2Y6R agonist (positive control)
MRS2578	Tocris	P2Y6R antagonist (control)
Assay Buffer (HBSS + 20 mM HEPES)	Gibco/In-house	Maintains physiological pH
384-well black-walled, clear-bottom plates	Corning	Assay plates for fluorescence reading

Step-by-Step Methodology

- Cell Culture and Plating:
  - Maintain P2Y6-1321N1 cells in DMEM/F-12 supplemented with 10% FBS and 0.7 mg/mL Geneticin.[9]
  - The day before the assay, seed the cells into 384-well black-walled, clear-bottom plates at a density of 15,000 cells/well in 25 µL of culture medium.[9]
  - Incubate overnight at 37°C in a 5% CO2 incubator to allow for cell attachment.
- Preparation of Dye Loading Solution:
  - Prepare a 2X Dye Loading Solution in Assay Buffer containing the Fluo-4 AM indicator and Probenecid. The final concentration in the well should be optimized, but a starting point is

© 2026 BenchChem. All rights reserved.

4 µM Fluo-4 AM and 2.5 mM Probenecid.

- Scientist's Note: The final concentration of DMSO from the Fluo-4 AM stock should be kept below 0.5% to avoid cellular toxicity.

- Dye Loading:
  - Gently remove the culture medium from the cell plates.
  - Add 20 µL of the 2X Dye Loading Solution to each well.
  - Incubate the plate for 1 hour at 37°C, followed by 30 minutes at room temperature in the dark to allow for complete de-esterification of the dye.
- Compound Preparation:
  - Prepare serial dilutions of your test compounds and control ligands (UDP for agonist mode, MRS2578 for antagonist mode) in Assay Buffer at 4X the final desired concentration.
  - For antagonist testing, also prepare a 4X solution of UDP at its EC80 concentration (determined from a prior agonist dose-response curve).
- Assay Execution (Fluorescent Plate Reader):
  - Place the cell plate and the compound plate into the plate reader.
  - For Agonist Screening:
    - Set the instrument to add 10 µL of the 4X test compound solution to the cell plate (final volume 40 µL).
    - Measure the fluorescence signal (Excitation: ~488 nm, Emission: ~520 nm) kinetically for 1-3 minutes immediately following compound addition.[9][10]
  - For Antagonist Screening:

© 2026 BenchChem. All rights reserved.

- First, add 10 µL of the 4X antagonist solution and incubate for a pre-determined time (e.g., 5-15 minutes).[9]
- Then, add 10 µL of the 4X EC80 UDP solution.
- Measure the fluorescence signal kinetically as described above.

Data Analysis

- Agonist Mode: Calculate the peak fluorescence response minus the basal fluorescence. Plot the response against the logarithm of the agonist concentration and fit the data to a four-parameter logistic equation to determine the EC50 value.
- Antagonist Mode: Plot the response against the logarithm of the antagonist concentration and fit to determine the IC50 value.

Protocol 2: Confirmatory IP-One HTRF Assay

This protocol describes a sensitive and robust method to quantify the accumulation of IP1, a stable metabolite of the IP3 signaling pathway, using Homogeneous Time-Resolved Fluorescence (HTRF) technology.

Causality Behind Experimental Choices:

- Measurement of IP1: Unlike the transient calcium signal, IP1 accumulates in the cell over time, providing a more stable and integrated readout of Gq receptor activation.[7] This makes the assay less susceptible to kinetic artifacts and suitable for an endpoint format.
- Lithium Chloride (LiCl): LiCl is a crucial component that inhibits inositol monophosphatases, the enzymes that degrade IP1.[6] This allows for the accumulation of IP1 to detectable levels, significantly enhancing the assay signal window.
- HTRF Technology: This is a competitive immunoassay format. The detection of the stable IP1 signal with HTRF provides high sensitivity, a large dynamic range, and is less prone to interference from fluorescent compounds compared to direct fluorescence intensity measurements.[6][7]

© 2026 BenchChem. All rights reserved.

Materials and Reagents

Reagent	Supplier	Purpose
P2Y6-expressing 1321N1 cells	In-house or Commercial	Host system for the assay
IP-One HTRF Assay Kit	Revvity, Cisbio	Contains IP1-d2, anti-IP1-Cryptate, and LiCl
UDP (disodium salt)	Sigma-Aldrich	P2Y6R agonist (positive control)
MRS2578	Tocris	P2Y6R antagonist (control)
384-well white, low-volume plates	Greiner	Assay plates for HTRF reading

Step-by-Step Methodology

- Cell Plating:
  - Seed P2Y6-1321N1 cells into 384-well white plates at a density of 15,000-20,000 cells/well in 10 µL of culture medium.
  - Incubate overnight at 37°C, 5% CO2.
- Compound Addition and Stimulation:
  - Prepare serial dilutions of test compounds in the stimulation buffer provided with the kit, which contains LiCl.
  - For Agonist Screening: Add 5 µL of the compound solution to the cells.
  - For Antagonist Screening: Add 2.5 µL of the antagonist solution, pre-incubate for 15-30 minutes, then add 2.5 µL of an EC80 concentration of UDP.
  - Incubate the plate for 60 minutes at 37°C.[6]
- Cell Lysis and Detection:
  - Add 2.5 µL of the IP1-d2 reagent (acceptor) diluted in lysis buffer to each well.

© 2026 BenchChem. All rights reserved.

- Add 2.5 µL of the anti-IP1-Cryptate reagent (donor) diluted in lysis buffer to each well.
- Incubate for 60 minutes at room temperature, protected from light.

- HTRF Reading:
  - Read the plate on an HTRF-compatible plate reader, measuring the emission at 665 nm (Cryptate) and 620 nm (d2).
  - The HTRF signal is typically expressed as the ratio of the two emission wavelengths multiplied by 10,000.

Data Analysis

- The HTRF signal is inversely proportional to the amount of IP1 produced.[6]
- Convert the HTRF ratio to IP1 concentration using a standard curve run in parallel.
- Plot the IP1 concentration against the logarithm of the compound concentration and fit the data to a four-parameter logistic equation to determine EC50 or IC50 values.

Trustworthiness and Validation

To ensure the integrity of your results, the following controls should be included in every assay plate:

- Negative Control: Cells treated with vehicle (e.g., DMSO in assay buffer) to define the basal response.
- Positive Control: Cells treated with a saturating concentration of a known P2Y6 agonist (e.g., 10 µM UDP) to define the maximum response.
- Agonist Dose-Response: A full dose-response curve of a reference agonist (UDP) to calculate EC50 and monitor assay performance (Z'-factor).
- Antagonist Control: For antagonist screens, include a known antagonist (e.g., MRS2578) to confirm the inhibition of the UDP-induced signal.

© 2026 BenchChem. All rights reserved.

A Z'-factor greater than 0.5 is generally considered indicative of a robust and reliable assay suitable for high-throughput screening.

Conclusion

The P2Y6 receptor represents a promising target for the development of novel anti-inflammatory therapeutics. The two-tiered assay system detailed in this guide, combining a high-throughput calcium mobilization assay with a robust IP-One confirmatory assay, provides a validated framework for the identification and characterization of P2Y6 receptor modulators. By understanding the causality behind the experimental choices and adhering to the detailed protocols, researchers can generate high-quality, reproducible data to advance their drug discovery programs.

References

- Hao Y, Liang JF, Chow AW, Cheung W-t, Ko W-h (2014) P2Y6 Receptor-Mediated Proinflammatory Signaling in Human Bronchial Epithelia. PLoS ONE 9(9): e106235. [Link]
- Alzheimer's Drug Discovery Foundation. (2019). P2Y6R Agonist. [Link]
- Li Y et al. (2024) Macrophage P2Y6 receptor signalling as a key mediator and therapeutic target in atherosclerosis. Signal Transduction and Targeted Therapy. [Link]
- The Role of P2y6 Receptor in Disease Occurrence and Progression. (2021). Lupine Publishers. [Link]
- Leduc M, et al. (2016). Central Role of P2Y6 UDP Receptor in Arteriolar Myogenic Tone. Arteriosclerosis, Thrombosis, and Vascular Biology, 36(8), 1644-1553. [Link]
- Ida K, et al. (2017). Identification of novel selective P2Y6 receptor antagonists by high-throughput screening assay. European Journal of Pharmacology, 814, 138-145. [Link]
- Kahsai AW, et al. (2011). Evaluating functional ligand-GPCR interactions in cell-based assays. Methods in Molecular Biology, 756, 287-304. [Link]
- Al-Attas, O. S., et al. (2024). Machine learning-aided search for ligands of P2Y6 and other P2Y receptors. RSC Medicinal Chemistry. [Link]

© 2026 BenchChem. All rights reserved.

- Jacobson KA, et al. (2008). Development of selective agonists and antagonists of P2Y receptors. Purinergic Signalling, 4(1), 1-14. [Link]

- Jacobson KA, et al. (2008). Development of selective agonists and antagonists of P2Y receptors. Purinergic Signalling, 4(1), 1-14. [Link]

- SB Drug Discovery. (n.d.). Optimizing GPCR assays with chimeric G proteins. [Link]
- P2Y6 expression mediates release of calcium and pro-inflammatory cytokines in 1321N1 cells. (n.d.). ResearchGate. [Link]
- The value of GPCR cell-based assays in drug discovery. (2024). Drug Target Review. [Link]
- Assay in Summary_ki. (n.d.). BindingDB. [Link]
- Characterizing Calcium Mobilization Using Kinetic Live Cell Imaging. (2023). Agilent. [Link]

Need Custom Synthesis?

BenchChem offers custom synthesis for rare earth carbides and specific isotopiclabeling.

Email: info@benchchem.com or Request Quote Online.

Sources

- 1. alzdiscovery.org [alzdiscovery.org]
- 2. lupinepublishers.com [lupinepublishers.com]
- 3. Development of selective agonists and antagonists of P2Y receptors - PMC [pmc.ncbi.nlm.nih.gov]
- 4. researchgate.net [researchgate.net]
- 5. Macrophage P2Y6 receptor signalling as a key mediator and therapeutic target in atherosclerosis - PMC [pmc.ncbi.nlm.nih.gov]
- 6. resources.revvity.com [resources.revvity.com]
- 7. selectscience.net [selectscience.net]
- 8. Evaluating functional ligand-GPCR interactions in cell-based assays - PMC [pmc.ncbi.nlm.nih.gov]

© 2026 BenchChem. All rights reserved.

- 9. ovid.com [ovid.com]
- 10. agilent.com [agilent.com]
- To cite this document: BenchChem. [Probing the Inflammatory Axis: A Guide to P2Y6 Receptor Activation Assays]. BenchChem, [2026]. [Online PDF]. Available at: [https://www.benchchem.com/product/b1662347/docs#probing-the-inflammatory-axis-a-guide-to-p2y6-receptor-activation-assays]

Disclaimer & Data Validity:

The information provided in this document is for Research Use Only (RUO) and is strictly not intended for diagnostic or therapeutic procedures. While BenchChem strives to provide accurate protocols, we make no warranties, express or implied, regarding the fitness of this product for every specific experimental setup.

Technical Support: The protocols provided are for reference purposes. Unsure if this reagent suits your experiment?

Need Industrial/Bulk Grade? Request Custom Synthesis Quote

BenchChem

Our mission is to be the trusted global source of essential and advanced chemicals, empowering scientists and researchers to drive progress in science and industry.

Contact

Address: 3281 E Guasti Rd

Ontario, CA 91761, United States

Phone: (601) 213-4426

Email: info@benchchem.com

Contact our Ph.D. Support Team for a compatibility check

© 2026 BenchChem. All rights reserved.