Application Note: Electro-Optical Switching Protocols for Phenyl Benzoate Liquid Crystals

Author: BenchChem Technical Support Team. **Date**: April 2026

Compound of Interest

Compound Name:	*4-(DECYLOXY)PHENYL 4-(HEXYLOXY)BENZOATE*
CAS No.:	*103521-22-8*
Cat. No.:	*B1649707*

Get Quote

Introduction & Scientific Context

Phenyl benzoate (PB) derivatives are a cornerstone of calamitic liquid crystal chemistry. Characterized by a rigid ester core linking two phenyl rings, they offer a versatile scaffold for tuning mesophasic behavior. Unlike biphenyls, the ester linkage breaks the conjugation, resulting in lower birefringence but often enhancing chemical stability and miscibility in eutectic mixtures.

For electro-optical applications, the critical performance metrics are the Threshold Voltage (

) and the Response Times (

). These parameters are governed by the interplay between the material's dielectric anisotropy (

), elastic constants (

), and rotational viscosity (

© 2026 BenchChem. All rights reserved.

).

Why Phenyl Benzoates?

- Structural Versatility: The ester linkage allows for easy substitution (e.g., lateral fluorination) to tailor dielectric anisotropy.
- Viscosity/Temperature Balance: While PB cores can be more viscous than simple biphenyls, they are essential for broadening the nematic range in commercial mixtures.
- Protocol Relevance: Accurate measurement of PB switching is challenging due to their susceptibility to ionic impurities (which can create screening fields) and their specific viscoelastic ratios.

Experimental Infrastructure

To ensure E-E-A-T (Experience, Expertise, Authoritativeness, and Trustworthiness) compliance, the experimental setup must isolate the electro-optical response from environmental noise (thermal fluctuations, vibration).

Optical Bench Configuration

The measurement relies on the Voltage-Dependent Transmittance (V-T) method using a cross-polarized optical train.

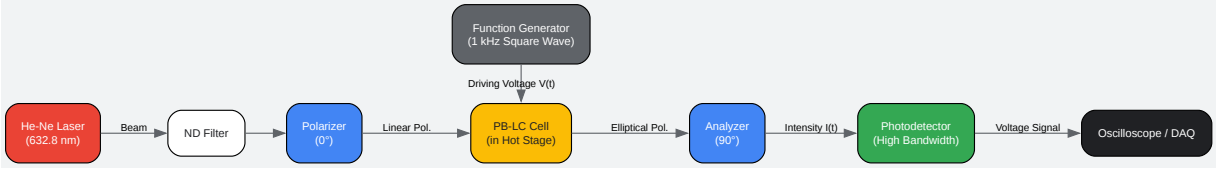

Click to download full resolution via product page

Figure 1: Schematic of the electro-optical measurement setup. The LC cell is placed between crossed polarizers (45° to the rubbing direction) to maximize phase retardation contrast.

© 2026 BenchChem. All rights reserved.

Sample Preparation (Critical Step)

- Cell Type: Sandwich cell with Indium Tin Oxide (ITO) electrodes.
- Alignment: Polyimide (PI) planar alignment layers rubbed anti-parallel to induce a uniform pre-tilt (

).
- Gap Thickness (

  ): 5.0

  0.1

  . Accurate thickness is vital as

  .
- Filling: Capillary filling in the isotropic phase (

) to avoid flow-induced alignment defects, followed by slow cooling (0.5 °C/min) to the nematic phase.

Protocol 1: Determination of Threshold Voltage ( )

The threshold voltage is the onset of the Fréedericksz transition, where the electric torque overcomes the elastic restoring torque.

Methodology

- Thermal Stabilization: Set the hot stage to

  (e.g., 25°C for room temp mixtures). Allow 15 minutes for equilibration.
- Waveform Setup: Configure the function generator for a 1 kHz square wave (to prevent ionic migration/screening common in esters).
- Voltage Ramp:
  - Start at 0 V.

© 2026 BenchChem. All rights reserved.

- Step size: 0.1 V.
- Dwell time: 2 seconds per step (allow director relaxation).

- Data Acquisition: Record the average optical intensity at each voltage step.

Analysis

Plot Transmittance (

) vs. Voltage (

).

- Region I (

  ): Transmittance is constant (Planar state).

- Region II (

  ): Transmittance changes (usually decreases for normally white mode) as molecules reorient homeotropically.

- Calculation:

  is defined as the voltage where transmittance changes by 10% (

) or via linear extrapolation of the steepest slope to the baseline.

Theoretical Validation:

Where

is the splay elastic constant and

is the dielectric anisotropy.

Protocol 2: Dynamic Response Time Measurement

This protocol measures how fast the phenyl benzoate molecules respond to an electric field (Rise Time) and relax back (Fall Time).

© 2026 BenchChem. All rights reserved.

Methodology

- Drive Voltage Selection: Set the "ON" voltage (

) to a saturation level, typically

  or 10V, to ensure complete reorientation.

- Modulation: Apply a burst square wave (gated) with a low duty cycle (e.g., 200 ms ON, 1000 ms OFF).

- Capture: Trigger the oscilloscope on the rising edge of the drive pulse.

Data Processing

- Rise Time (

  ): Time for transmittance to change from 90% to 10% of the maximum contrast.

- Fall Time (

  ): Time for transmittance to return from 10% to 90% after voltage removal.

Causality & Physics: The fall time is purely elastic-driven (no electric field) and provides a direct measure of the material's viscosity-to-elasticity ratio:

Note: Phenyl benzoates often exhibit higher

than biphenyls due to the ester group's polarity, making

a critical quality control parameter.

Data Presentation & Interpretation

Summarize your findings in the following format to facilitate batch-to-batch comparison.

Table 1: Electro-Optical Parameters of Phenyl Benzoate Sample (Batch PB-2025-X)

© 2026 BenchChem. All rights reserved.

Parameter	Symbol	Value (Example)	Unit	Conditions
Threshold Voltage		1.85 ± 0.05	V	1 kHz, 25°C
Rise Time		4.2	ms	
Fall Time		18.5	ms	Free relaxation
Viscoelastic Coeff.[1]		25.4	ms/	Derived

Workflow Logic Diagram

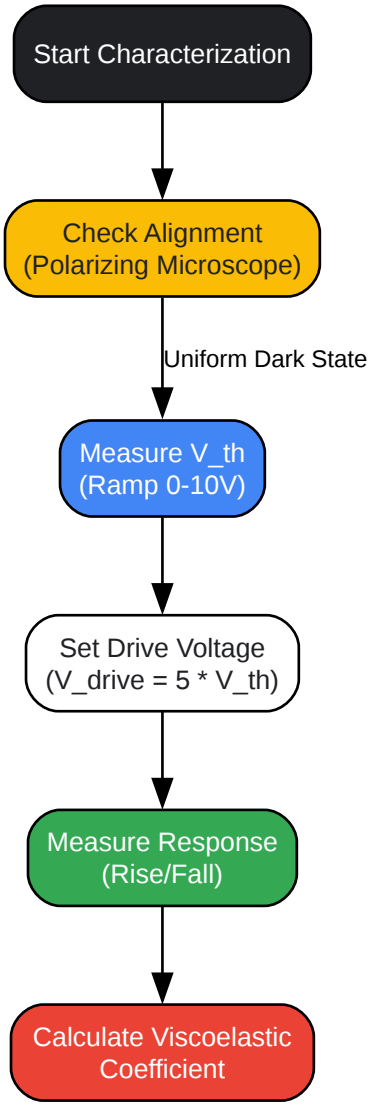

© 2026 BenchChem. All rights reserved.

Click to download full resolution via product page

Figure 2: Logical workflow for validating LC switching performance.

Troubleshooting & Expert Tips

- Hysteresis in V-T Curve:
  - Cause: Ionic impurities in the phenyl benzoate ester.
  - Fix: Use a higher frequency (e.g., 2 kHz or 5 kHz) for the driving voltage to prevent ion accumulation at the alignment layers.
- Slow Fall Time:
  - Cause: Backflow effects or thick cell gap.
  - Fix: Verify cell thickness (

) using interferometry. Remember

    ; a small error in

    causes a large error in

    .
- Inconsistent

  :
  - Cause: Weak anchoring of the PI layer.
  - Fix: Re-anneal the cell after filling to strengthen the surface interaction.

References

- Fréedericksz Transition & Thresholds

© 2026 BenchChem. All rights reserved.

- Crandall, K. A., et al. "Vanishing Freedericksz Transition Threshold Voltage in a Chiral Nematic Liquid Crystal."[2] Scholarly Commons @ CWRU, 1994.[2]

- Response Time Measurement Standards
  - Elze, T., et al. "Liquid crystal display response time estimation for medical applications." Medical Physics, 2009.[1]

- Phenyl Benzoate Properties
  - Imrie, C. T., et al. "Synthesis and properties of phenyl benzoate-based and biphenyl-based liquid crystalline thiol-ene monomers."[3] Liquid Crystals, 2013.

- Viscosity & Elastic Constants
  - Wu, S. T., et al. "Low temperature effects on the response time of liquid crystal displays." Applied Physics Letters, 2009.

- General Switching Protocols
  - PhysicsOpenLab. "Liquid Crystals and Electro-Optic Modulation." PhysicsOpenLab, 2020.

Need Custom Synthesis?

BenchChem offers custom synthesis for rare earth carbides and specific isotopiclabeling.

Email: info@benchchem.com or Request Quote Online.

Sources

- 1. pubs.aip.org [pubs.aip.org]
- 2. commons.case.edu [commons.case.edu]
- 3. researchgate.net [researchgate.net]
- To cite this document: BenchChem. [Application Note: Electro-Optical Switching Protocols for Phenyl Benzoate Liquid Crystals]. BenchChem, [2026]. [Online PDF]. Available at: [https://www.benchchem.com/product/b1649707/docs#application-note-electro-optical-switching-protocols-for-phenyl-benzoate-liquid-crystals]

© 2026 BenchChem. All rights reserved.

Disclaimer & Data Validity:

The information provided in this document is for Research Use Only (RUO) and is strictly not intended for diagnostic or therapeutic procedures. While BenchChem strives to provide accurate protocols, we make no warranties, express or implied, regarding the fitness of this product for every specific experimental setup.

Technical Support: The protocols provided are for reference purposes. Unsure if this reagent suits your experiment?

Need Industrial/Bulk Grade? Request Custom Synthesis Quote

BenchChem

Our mission is to be the trusted global source of essential and advanced chemicals, empowering scientists and researchers to drive progress in science and industry.

Contact

Address: 3281 E Guasti Rd

Ontario, CA 91761, United States

Phone: (601) 213-4426

Email: info@benchchem.com

Contact our Ph.D. Support Team for a compatibility check

© 2026 BenchChem. All rights reserved.