# Application Note: Formulation of Hydrophobic Coatings Using Diethyl(isopropyl)silanol

**Author**: BenchChem Technical Support Team. **Date**: May 2026

***Compound of Interest***

| | |
|---|---|
| *Compound Name:* | *Diethyl(isopropyl)silanol* |
| *CAS No.:* | *1158830-31-9* |
| *Cat. No.:* | *B1645497* |

*Get Quote*

## Introduction

The generation of robust and reliable hydrophobic surfaces is a critical requirement across numerous fields, including microfluidics, anti-icing surfaces, self-cleaning coatings, and biomedical devices.[1] The primary strategy for imparting hydrophobicity involves the chemical modification of a surface to reduce its surface energy.[2][3] Silane-based compounds are exemplary for this purpose, as they can form covalent bonds with hydroxyl-rich surfaces (e.g., glass, silica, oxidized metals), creating a durable, low-energy coating.[2]

This application note details the use of **Diethyl(isopropyl)silanol** (DEIPS), a specific trialkylsilanol, for the formulation of hydrophobic coatings. DEIPS offers a compelling combination of reactivity and steric hindrance. The silanol group (Si-OH) provides a direct reaction pathway with surface hydroxyls, while the arrangement of two ethyl groups and one bulkier isopropyl group creates a dense, non-polar "umbrella" that effectively repels water. This guide provides the scientific rationale, detailed experimental protocols, and characterization methods for researchers and engineers aiming to create and validate DEIPS-based hydrophobic surfaces.

© 2026 BenchChem. All rights reserved.

# Principle of Surface Modification

The hydrophobization mechanism relies on the condensation reaction between the silanol group of DEIPS and the hydroxyl (-OH) groups present on the substrate surface. These surface hydroxyls, often called surface silanols in the case of glass or silica, are the primary reactive sites.

The reaction proceeds as follows:

Substrate-OH + HO-Si($CH_2CH_3$)$_2$($CH(CH_3)_2$) → Substrate-O-Si($CH_2CH_3$)$_2$($CH(CH_3)_2$) + $H_2O$

This process covalently grafts the diethyl(isopropyl)silyl group onto the surface. The alkyl groups (ethyl and isopropyl) are non-polar and project away from the surface, forming a molecularly thin layer that minimizes interaction with water, leading to a high water contact angle and hydrophobic behavior.[4] The steric bulk of the isopropyl group, compared to simpler trialkylsilanols, is hypothesized to influence the packing density and conformational order of the resulting monolayer, which can enhance its stability and water-repelling properties.

Table 1: Physicochemical Properties of **Diethyl(isopropyl)silanol**

| Property | Value | Source |
|---|---|---|
| Chemical Formula | **$C_7H_{18}OSi$** | **[5][6][7][8]** |
| Molecular Weight | 146.31 g/mol | [5][7][8] |
| CAS Number | 1158830-31-9 | [5][6][7] |
| Appearance | Liquid (inferred) | N/A |
| Density | 0.8 ± 0.1 g/cm³ | [6] |
| Boiling Point | 171.5 ± 9.0 °C at 760 mmHg | [6] |
| Flash Point | 57.5 ± 18.7 °C | [6] |

| Purity | >95.0% (GC) |[5][6] |

# Experimental Protocols

© 2026 BenchChem. All rights reserved.

Reproducible and effective surface modification requires meticulous attention to three key stages: substrate preparation, coating application, and post-treatment curing.

## PART A: Substrate Preparation (Glass/Silicon Wafers)

Proper cleaning and activation of the substrate are paramount to ensure a high density of surface hydroxyl groups, which are the anchor points for the silanol.

Materials:

- Glass microscope slides or silicon wafers
- Detergent (e.g., Alconox)
- Deionized (DI) water
- Acetone (HPLC grade)
- Methanol (HPLC grade)
- Sonicator bath
- Plasma cleaner or Piranha solution (Extreme Caution Required)
- Oven (110 °C)

Protocol:

- Initial Cleaning: Thoroughly wash substrates with detergent and water. Rinse extensively with DI water to remove all detergent residues.[9]
- Solvent Degreasing: Place the substrates in a staining rack and sonicate in acetone for 20 minutes.[10]
- Rinse: Remove from acetone and rinse once with methanol.[10]
- Second Sonication: Sonicate the substrates in methanol for 20 minutes.[10]

© 2026 BenchChem. All rights reserved.

- Drying: Air-dry the substrates with a stream of nitrogen or clean air and then place them in an oven at 110 °C for at least 10 minutes to remove residual solvent.[10]
- Surface Activation (Choose one method):
  - Method A (Plasma Cleaning - Recommended): Place the dried substrates in a plasma cleaner for 5-20 minutes to activate the surface by creating hydroxyl groups.[10] This is a safer and highly effective method.
  - Method B (Piranha Etch - Use with Extreme Caution): Prepare Piranha solution by slowly adding 1 part of 30% hydrogen peroxide ($H_2O_2$) to 3 parts of concentrated sulfuric acid ($H_2SO_4$). Immerse the substrates for 15-30 minutes. This process is extremely hazardous and must be performed in a certified fume hood with appropriate personal protective equipment (PPE). After etching, rinse copiously with DI water.
- Final Drying: Dry the activated substrates in an oven at 110 °C for at least 1 hour and store in a desiccator until ready for silanization.[10] The surface should be used within a few hours of activation.

## PART B: Hydrophobic Coating Formulation & Application

This protocol describes a solution-phase deposition method. All steps should be performed in a low-humidity environment (e.g., a glovebox or under a dry nitrogen atmosphere) to prevent premature self-condensation of the silanol.

Materials:

- **Diethyl(isopropyl)silanol** (DEIPS)
- Anhydrous Toluene or Heptane (solvent)
- Activated substrates from Part A
- Glass beakers or Petri dishes
- Orbital shaker (optional)

© 2026 BenchChem. All rights reserved.

Protocol:

- Solution Preparation: In a fume hood, prepare a 1-2% (v/v) solution of DEIPS in anhydrous toluene. For example, add 1 mL of DEIPS to 99 mL of anhydrous toluene.
- Substrate Immersion: Place the activated, dry substrates into the silanol solution. Ensure the entire surface is submerged.[11]
- Reaction Incubation: Cover the container and allow the reaction to proceed for 1-2 hours at room temperature.[11] Gentle agitation on an orbital shaker can improve coating uniformity.
- Rinsing: Remove the substrates from the silanization solution and rinse them sequentially with fresh anhydrous toluene (3 times) and then methanol (3 times) to remove any unreacted silanol and physisorbed molecules.[9][11]

## PART C: Curing and Finalization

Curing helps to drive the condensation reaction to completion and remove residual water molecules.

Protocol:

- Drying: Dry the rinsed substrates with a stream of nitrogen.
- Curing: Place the substrates in an oven at 80-110 °C for 1-4 hours.[11]
- Cooling & Storage: Allow the substrates to cool to room temperature. The hydrophobic surface is now ready for characterization and use. Store in a clean, dry container.

# Visualization of Workflow and Mechanism

## Chemical Reaction Mechanism

The diagram below illustrates the covalent attachment of a DEIPS molecule to a hydroxylated substrate surface, resulting in a hydrophobic monolayer.

© 2026 BenchChem. All rights reserved.

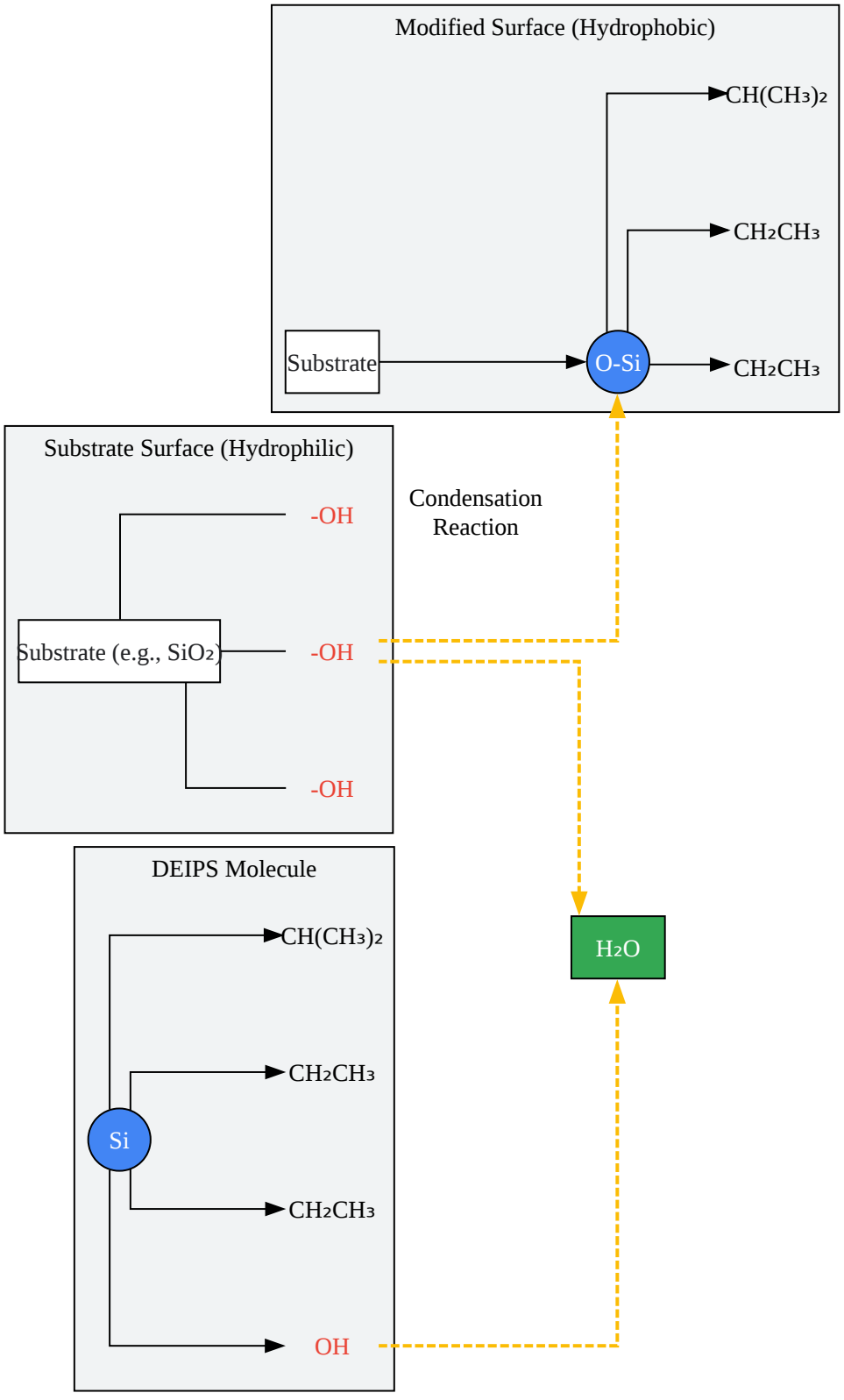


Click to download full resolution via product page

Caption: Reaction of **Diethyl(isopropyl)silanol** with surface hydroxyl groups.

© 2026 BenchChem. All rights reserved.

## Experimental Workflow

This diagram outlines the complete process from substrate cleaning to final characterization of the hydrophobic coating.

© 2026 BenchChem. All rights reserved.

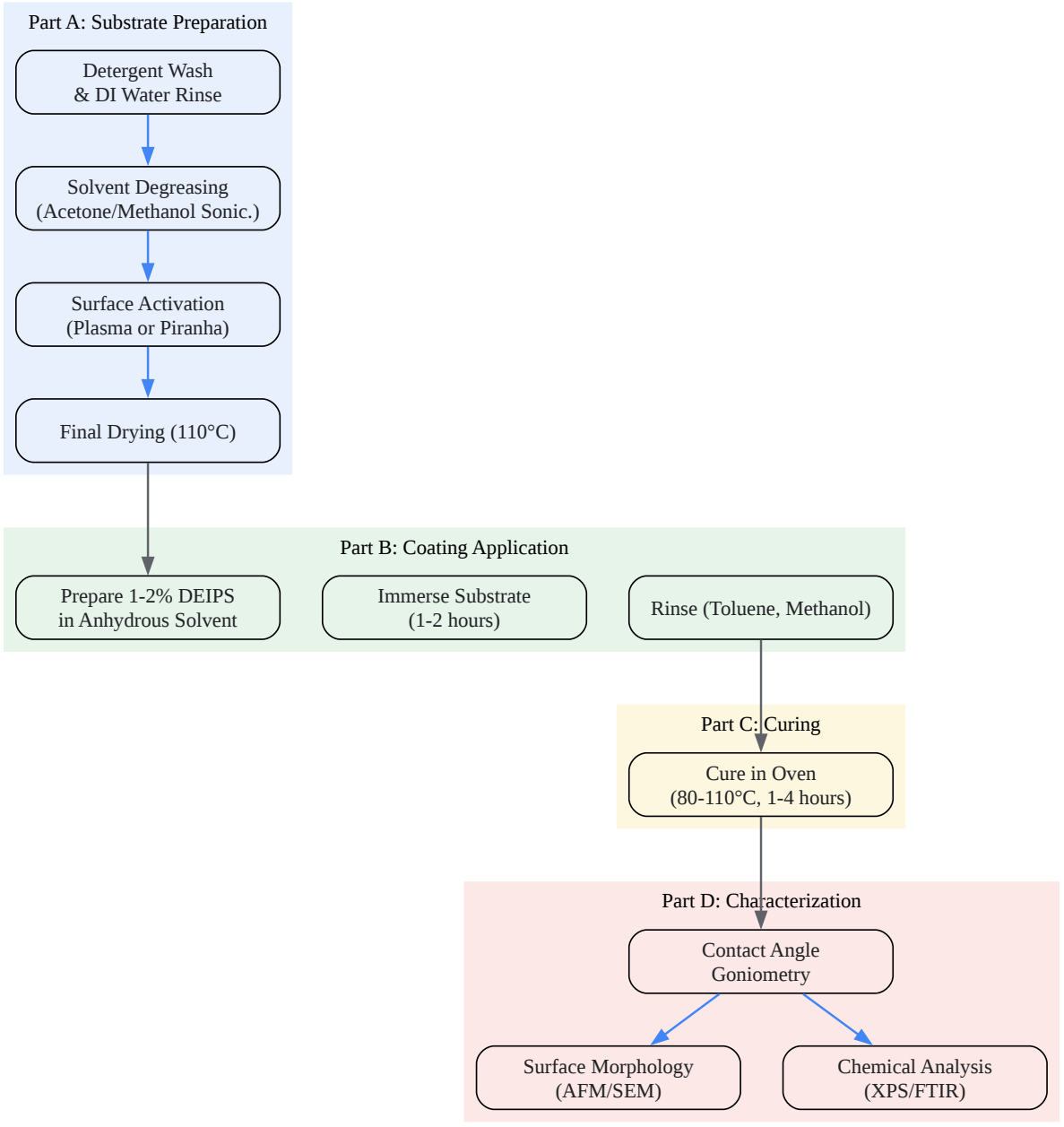


Click to download full resolution via product page

© 2026 BenchChem. All rights reserved.

***Need Custom Synthesis?***

*BenchChem offers custom synthesis for rare earth carbides and specific isotopiclabeling.*

*Email: info@benchchem.com or Request Quote Online.*

# Sources

- 1. atlantis-press.com [atlantis-press.com]
- 2. zmsilane.com [zmsilane.com]
- 3. researchgate.net [researchgate.net]
- 4. Hydrophobic Silane Surface Treatments - Gelest [technical.gelest.com]
- 5. labsolu.ca [labsolu.ca]
- 6. pure-synth.com [pure-synth.com]
- 7. calpaclab.com [calpaclab.com]
- 8. Diethyl(isopropyl)silanol | C7H18OSi | CID 19901897 - PubChem [pubchem.ncbi.nlm.nih.gov]
- 9. peptideweb.com [peptideweb.com]
- 10. Surface Chemistry Protocol | Popa Lab [popalab.uwm.edu]
- 11. rsc.org [rsc.org]
- To cite this document: BenchChem. [Application Note: Formulation of Hydrophobic Coatings Using Diethyl(isopropyl)silanol]. BenchChem, [2026]. [Online PDF]. Available at: [https://www.benchchem.com/product/b1645497/docs#application-note-formulation-of-hydrophobic-coatings-using-diethyl-isopropyl-silanol]

---

**Disclaimer & Data Validity:**

The information provided in this document is for Research Use Only (RUO) and is strictly not intended for diagnostic or therapeutic procedures. While BenchChem strives to provide accurate protocols, we make no warranties, express or implied, regarding the fitness of this product for every specific experimental setup.

© 2026 BenchChem. All rights reserved.

**Technical Support:**The protocols provided are for reference purposes. Unsure if this reagent suits your experiment?

**Need Industrial/Bulk Grade?** Request Custom Synthesis Quote

# BenchChem

Our mission is to be the trusted global source of essential and advanced chemicals, empowering scientists and researchers to drive progress in science and industry.

Contact

Address: 3281 E Guasti Rd

Ontario, CA 91761, United States

Phone: (601) 213-4426

Email: info@benchchem.com

Contact our Ph.D. Support Team for a compatibility check

© 2026 BenchChem. All rights reserved.