A Comparative Guide to Spectrophotometry versus DCIP for Antioxidant Capacity Measurement

Author: BenchChem Technical Support Team. **Date**: May 2026

Compound of Interest

Compound Name: *DCIP hydrate sodium*

Cat. No.: *B1632235*

Get Quote

For Researchers, Scientists, and Drug Development Professionals

The accurate measurement of antioxidant capacity is crucial in various fields, including drug development, food science, and biomedical research. This guide provides an objective comparison between two common methodologies: spectrophotometric assays and the 2,6-dichlorophenolindophenol (DCIP) assay. We will delve into their principles, experimental protocols, and performance characteristics, supported by experimental data, to help you select the most appropriate method for your research needs.

At a Glance: Spectrophotometry vs. DCIP Assay

© 2026 BenchChem. All rights reserved.

Feature	Spectrophotometric Assays (e.g., DPPH, ABTS, FRAP)	DCIP Assay
Principle	Measures the reduction of a chromogenic reagent (e.g., DPPH radical, ABTS radical cation, Fe^{3+}-TPTZ complex) by antioxidants, leading to a color change.[1][2][3]	Measures the reduction of the blue/pink DCIP dye to a colorless form by antioxidants.[4][5]
Primary Mechanism	Primarily based on Single Electron Transfer (SET), though some (like ABTS) can also involve Hydrogen Atom Transfer (HAT).[2][6]	Single Electron Transfer (SET).[7][8]
Typical Analytes	Broad range of hydrophilic and lipophilic antioxidants, including phenolic compounds and flavonoids.[1][2]	Primarily used for ascorbic acid (Vitamin C) but can react with other antioxidants like glutathione, NADH, and some phenolics.[9][10][11]
Speed	Generally rapid, with reaction times ranging from minutes to an hour.[1][12]	Can be very fast, especially for ascorbic acid.[4][13]
pH Sensitivity	Varies by assay; FRAP is conducted at an acidic pH (3.6), while DPPH and ABTS are typically performed at neutral or slightly alkaline pH.[2][14]	The color of DCIP is pH-dependent (blue in alkaline/neutral, pink in acidic conditions).[9]
Instrumentation	UV-Vis Spectrophotometer or microplate reader.[15]	UV-Vis Spectrophotometer or through titration.[4]
Common Units	Trolox Equivalents (TE), Gallic Acid Equivalents (GAE), IC_{50} values.[6]	Ascorbic Acid Equivalents, or expressed as the amount of DCIP reduced.[7][8]

© 2026 BenchChem. All rights reserved.

Reproducibility	Generally good, though can be influenced by factors like solvent and reaction time. The coefficient of variation for ABTS has been reported to be as low as 0.25%, while for DPPH it can be higher (e.g., 5.30%).[6]	Good for specific applications like ascorbic acid determination.[9]

Delving Deeper: Principles and Mechanisms

Spectrophotometric Assays: A Trio of Common Methods

Spectrophotometric assays are the workhorses of antioxidant capacity measurement due to their simplicity, speed, and cost-effectiveness.[15] The most common methods—DPPH, ABTS, and FRAP—all rely on the ability of an antioxidant to reduce an oxidant, resulting in a measurable color change.[2]

- DPPH (2,2-diphenyl-1-picrylhydrazyl) Assay: This method uses a stable free radical, DPPH•, which has a deep violet color. In the presence of an antioxidant that can donate a hydrogen atom or an electron, the DPPH• is reduced to the yellow-colored DPPH-H. The decrease in absorbance at ~517 nm is proportional to the antioxidant capacity.[3][12]

- ABTS (2,2'-azino-bis(3-ethylbenzothiazoline-6-sulfonic acid)) Assay: This assay involves the generation of the blue-green ABTS radical cation (ABTS•+). Antioxidants in the sample reduce the ABTS•+, causing the solution to lose its color. The change in absorbance at ~734 nm is used to quantify the antioxidant activity.[2] A key advantage of the ABTS assay is its applicability to both hydrophilic and lipophilic antioxidants.[14]

- FRAP (Ferric Reducing Antioxidant Power) Assay: The FRAP assay measures the ability of a sample to reduce ferric iron (Fe^{3+}) to ferrous iron (Fe^{2+}) at a low pH. The reduction is monitored by the formation of a colored ferrous-tripyridyltriazine (Fe^{2+}-TPTZ) complex, which has a maximum absorbance at ~593 nm.[14]

The DCIP (2,6-dichlorophenolindophenol) Assay

© 2026 BenchChem. All rights reserved.

The DCIP assay utilizes a redox indicator that is blue when oxidized and colorless when reduced.[4] Historically, it has been a standard method for the quantification of ascorbic acid.[4] The principle is straightforward: the antioxidant reduces the DCIP dye, and the extent of this reduction, measured as a decrease in absorbance at around 600 nm, is proportional to the antioxidant concentration.[5] While highly effective for certain antioxidants like vitamin C, its reactivity with a broader range of compounds can be more limited compared to assays like ABTS and DPPH.[10][11]

Experimental Protocols

Below are detailed methodologies for performing spectrophotometric and DCIP assays.

DPPH Radical Scavenging Assay Protocol

Materials:

- DPPH (2,2-diphenyl-1-picrylhydrazyl)
- Methanol or ethanol
- Antioxidant standard (e.g., Trolox, Ascorbic Acid)
- Test samples
- 96-well microplate
- Microplate reader

Procedure:

- Preparation of DPPH Solution: Prepare a 0.1 mM solution of DPPH in methanol. The absorbance of this solution at 517 nm should be approximately 1.0.
- Sample and Standard Preparation: Prepare a series of dilutions of the test sample and the antioxidant standard in methanol.
- Assay:

© 2026 BenchChem. All rights reserved.

- In a 96-well plate, add 100 µL of the sample or standard dilutions to respective wells.
- Add 100 µL of the DPPH working solution to all wells.
- Include a control well containing 100 µL of methanol and 100 µL of the DPPH solution.

- Incubation: Incubate the plate in the dark at room temperature for 30 minutes.
- Measurement: Measure the absorbance of each well at 517 nm using a microplate reader.
- Calculation: The percentage of radical scavenging activity is calculated using the formula: % Scavenging = [(A_control - A_sample) / A_control] x 100 The results can be expressed as an IC_{50} value (the concentration of the sample required to scavenge 50% of the DPPH radicals) or as Trolox Equivalents (TE) by comparing the sample's activity to a Trolox standard curve.

ABTS Radical Cation Decolorization Assay Protocol

Materials:

- ABTS (2,2'-azino-bis(3-ethylbenzothiazoline-6-sulfonic acid))
- Potassium persulfate
- Ethanol or phosphate-buffered saline (PBS)
- Antioxidant standard (e.g., Trolox)
- Test samples
- 96-well microplate
- Microplate reader

Procedure:

- Preparation of ABTS Radical Cation (ABTS•+) Solution:
  - Prepare a 7 mM aqueous solution of ABTS.

© 2026 BenchChem. All rights reserved.

- Prepare a 2.45 mM aqueous solution of potassium persulfate.
- Mix the two solutions in equal volumes and allow them to react in the dark at room temperature for 12-16 hours. This forms the ABTS•+ stock solution.

- Preparation of Working Solution: Dilute the ABTS•+ stock solution with ethanol or PBS to an absorbance of 0.70 (± 0.02) at 734 nm.
- Sample and Standard Preparation: Prepare a series of dilutions of the test sample and the Trolox standard.
- Assay:
  - In a 96-well plate, add 10 µL of the sample or standard dilutions to respective wells.
  - Add 190 µL of the ABTS•+ working solution to all wells.
- Incubation: Incubate the plate at room temperature for a set time (e.g., 6 minutes).
- Measurement: Measure the absorbance of each well at 734 nm.
- Calculation: Calculate the percentage of inhibition and express the results as Trolox Equivalent Antioxidant Capacity (TEAC) from a standard curve.

FRAP (Ferric Reducing Antioxidant Power) Assay Protocol

Materials:

- Acetate buffer (300 mM, pH 3.6)
- 10 mM TPTZ (2,4,6-tripyridyl-s-triazine) in 40 mM HCl
- 20 mM $FeCl_3 \cdot 6H_2O$ solution
- Antioxidant standard (e.g., $FeSO_4 \cdot 7H_2O$ or Trolox)
- Test samples

© 2026 BenchChem. All rights reserved.

- 96-well microplate
- Microplate reader

Procedure:

- Preparation of FRAP Reagent: Prepare the FRAP reagent fresh by mixing acetate buffer, TPTZ solution, and $FeCl_3$ solution in a 10:1:1 (v/v/v) ratio. Warm the reagent to 37°C before use.
- Sample and Standard Preparation: Prepare a series of dilutions of the test sample and the standard.
- Assay:
  - Add 180 µL of the FRAP reagent to each well of a 96-well plate.
  - Add 20 µL of the sample, standard, or a blank (solvent) to the wells.
- Incubation: Incubate the plate at 37°C for a specified time (e.g., 4-30 minutes).
- Measurement: Measure the absorbance at 593 nm.
- Calculation: The antioxidant capacity is determined by comparing the change in absorbance of the sample to a standard curve and is often expressed as µM Fe(II) equivalents or Trolox equivalents.

DCIP (2,6-dichlorophenolindophenol) Assay Protocol

Materials:

- DCIP sodium salt
- Phosphate buffer (e.g., pH 7.0)
- Antioxidant standard (e.g., Ascorbic Acid)
- Test samples

© 2026 BenchChem. All rights reserved.

- Spectrophotometer or microplate reader

Procedure:

- Preparation of DCIP Solution: Prepare a stock solution of DCIP in distilled water and dilute it with a suitable buffer to a working concentration that gives a stable and measurable absorbance at ~600 nm.
- Sample and Standard Preparation: Prepare a series of dilutions of the test sample and ascorbic acid standard in the same buffer.
- Assay:
  - To a cuvette or well, add a defined volume of the DCIP working solution.
  - Add a specific volume of the sample or standard and mix quickly.
  - A blank should be prepared with the buffer instead of the sample.
- Measurement: Immediately measure the decrease in absorbance at ~600 nm over a set period. The reaction with ascorbic acid is very rapid.
- Calculation: The antioxidant capacity can be calculated based on the amount of DCIP reduced, which is determined from the change in absorbance using the molar extinction coefficient of DCIP. The results are often expressed as Ascorbic Acid Equivalents.

Visualizing the Chemistry: Reaction Mechanisms and Workflows

To better understand the underlying processes of these assays, the following diagrams illustrate their chemical principles and experimental workflows.

© 2026 BenchChem. All rights reserved.

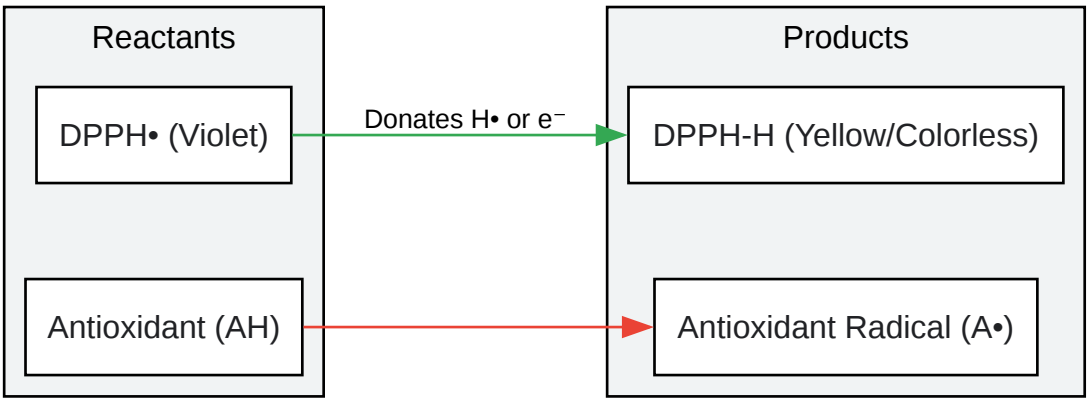

Click to download full resolution via product page

Caption: Chemical principle of the DPPH assay.

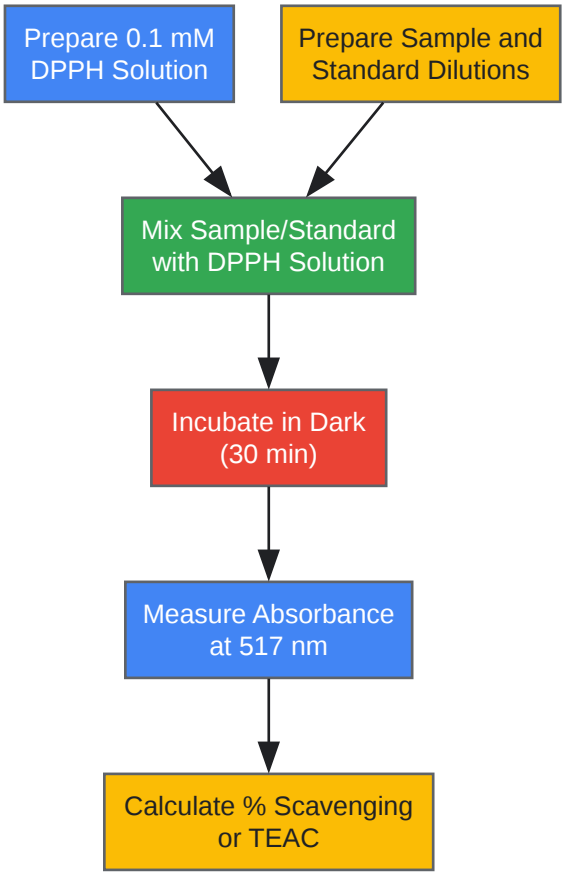

Click to download full resolution via product page

Caption: Experimental workflow for the DPPH antioxidant assay.

© 2026 BenchChem. All rights reserved.

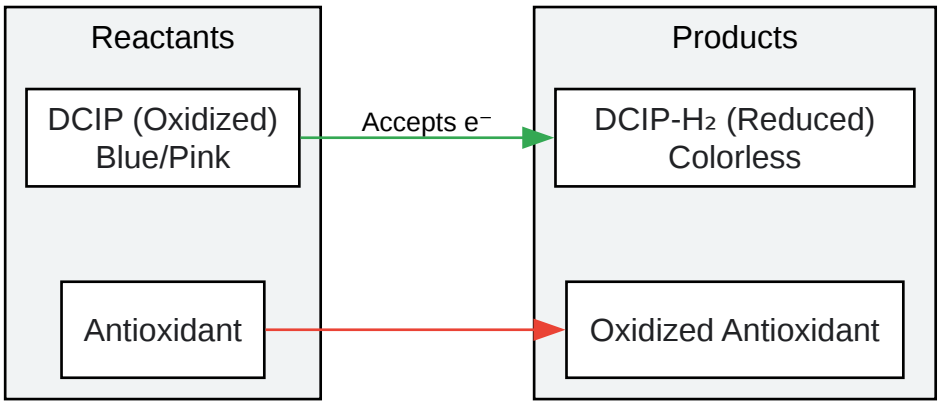

Click to download full resolution via product page

Caption: Chemical principle of the DCIP assay.

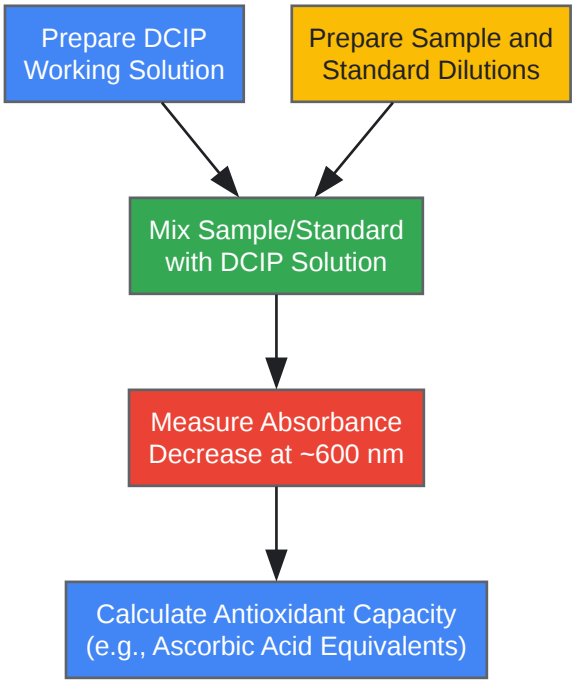

Click to download full resolution via product page

Caption: Experimental workflow for the DCIP antioxidant assay.

Concluding Remarks: Which Assay is Right for You?

© 2026 BenchChem. All rights reserved.

The choice between spectrophotometric assays and the DCIP method depends heavily on the research question and the nature of the samples.

Spectrophotometric assays (DPPH, ABTS, FRAP) are versatile, widely used, and suitable for screening a broad range of antioxidants in various sample types. They are the methods of choice for obtaining a general overview of the total antioxidant capacity of complex mixtures like plant extracts or biological fluids.

The DCIP assay, on the other hand, excels in its specificity and speed for certain reducing agents, most notably ascorbic acid. While it can react with other antioxidants, its reactivity profile is narrower. This makes it an excellent tool for specific quantification of Vitamin C or for applications where a rapid assessment of strong reducing agents is needed.

For a comprehensive understanding of a sample's antioxidant profile, it is often recommended to use a battery of assays with different mechanisms. For instance, combining a HAT-based assay with a SET-based assay can provide a more complete picture. The data and protocols presented in this guide are intended to equip researchers, scientists, and drug development professionals with the necessary information to make an informed decision on the most suitable method for their antioxidant capacity measurement needs.

Need Custom Synthesis?

BenchChem offers custom synthesis for rare earth carbides and specific isotopiclabeling.

Email: info@benchchem.com or Request Quote Online.

References

- 1. researchgate.net [researchgate.net]
- 2. mdpi.com [mdpi.com]
- 3. youtube.com [youtube.com]
- 4. researchgate.net [researchgate.net]
- 5. mdpi.com [mdpi.com]
- 6. Comparing the four spectrophotometric assays DPPH, ABTS, FRAP and Folin-Ciocalteu to evaluate the antioxidant activity of a set of lignins - American Chemical Society

[acs.digitellinc.com]

- 7. Determination of Total Antioxidant Capacity of Commercial Beverage Samples by Capillary Electrophoresis via in-line Reaction with 2,6 – Dichlorophenolindophenol - PMC [pmc.ncbi.nlm.nih.gov]
- 8. Determination of total antioxidant capacity of commercial beverage samples by capillary electrophoresis via inline reaction with 2,6-dichlorophenolindophenol - PubMed [pubmed.ncbi.nlm.nih.gov]
- 9. Novel Potentiometric 2,6-Dichlorophenolindo-phenolate (DCPIP) Membrane-Based Sensors: Assessment of Their Input in the Determination of Total Phenolics and Ascorbic Acid in Beverages - PMC [pmc.ncbi.nlm.nih.gov]
- 10. researchgate.net [researchgate.net]
- 11. Comparison of Various Assays of Antioxidant Activity/Capacity: Limited Significance of Redox Potentials of Oxidants/Indicators - PMC [pmc.ncbi.nlm.nih.gov]
- 12. A Concise Review of Current In Vitro Chemical and Cell-Based Antioxidant Assay Methods - PMC [pmc.ncbi.nlm.nih.gov]
- 13. researchgate.net [researchgate.net]
- 14. mdpi.com [mdpi.com]
- 15. Spectrophotometric Methods for Measurement of Antioxidant Activity in Food and Pharmaceuticals - PMC [pmc.ncbi.nlm.nih.gov]
- To cite this document: BenchChem. [A Comparative Guide to Spectrophotometry versus DCIP for Antioxidant Capacity Measurement]. BenchChem, [2026]. [Online PDF]. Available at: [https://www.benchchem.com/product/b1632235/docs#a-comparative-guide-to-spectrophotometry-versus-dcip-for-antioxidant-capacity-measurement]

Disclaimer & Data Validity:

The information provided in this document is for Research Use Only (RUO) and is strictly not intended for diagnostic or therapeutic procedures. While BenchChem strives to provide accurate protocols, we make no warranties, express or implied, regarding the fitness of this product for every specific experimental setup.

Technical Support: The protocols provided are for reference purposes. Unsure if this reagent suits your experiment?

Need Industrial/Bulk Grade? Request Custom Synthesis Quote

© 2026 BenchChem. All rights reserved.

BenchChem

Our mission is to be the trusted global source of essential and advanced chemicals, empowering scientists and researchers to drive progress in science and industry.

Contact

Address: 3281 E Guasti Rd

Ontario, CA 91761, United States

Phone: (601) 213-4426

Email: info@benchchem.com

Contact our Ph.D. Support Team for a compatibility check

© 2026 BenchChem. All rights reserved.