Application Note: Microwave-Assisted Synthesis Involving Dimethyl 4,5-Dihydroxyphthalate Intermediates

Author: BenchChem Technical Support Team. **Date**: May 2026

Compound of Interest

Compound Name:	*Dimethyl 4,5-dihydroxyphthalate*
CAS No.:	*20035-53-4*
Cat. No.:	*B1630926*

Get Quote

Executive Summary

Dimethyl 4,5-dihydroxyphthalate (DMDP) is a critical bifunctional building block in the synthesis of bioactive catechols, heterocyclic scaffolds, and advanced materials such as octasubstituted phthalocyanines. Conventional thermal synthesis of DMDP and its derivatives often suffers from prolonged reaction times (12–24 hours), harsh solvent requirements, and incomplete conversion.

This Application Note details a Microwave-Assisted Organic Synthesis (MAOS) protocol that reduces reaction times to minutes while improving yield and purity. We focus on two core workflows:

- The "Make": Rapid synthesis of DMDP via microwave-enhanced Nucleophilic Aromatic Substitution (

).

© 2026 BenchChem. All rights reserved.

- The "Use": Downstream conversion of DMDP into metallophthalocyanines, demonstrating its utility as a high-value intermediate.

Scientific Background & Mechanistic Insight

The Microwave Advantage in Reactions

The synthesis of DMDP from halogenated precursors (e.g., dimethyl 4,5-dichlorophthalate) involves a Nucleophilic Aromatic Substitution (

). This reaction is kinetically sluggish under standard reflux due to the electron-rich nature of the aromatic ring once the first hydroxyl group is introduced, which deactivates the ring toward the second substitution.

Microwave irradiation overcomes this barrier through dielectric heating. Polar solvents (e.g., DMSO, water) couple directly with the oscillating electric field, generating rapid internal heating. This leads to:

- Selective Superheating: Localized microscopic temperatures can exceed the bulk solvent boiling point, accelerating the rate-determining step.
- Transition State Stabilization: The polar transition state of the Meisenheimer complex is stabilized by the dipole alignment effects of the microwave field [1].

Pathway Logic

The chosen pathway utilizes commercially available Dimethyl 4,5-dichlorophthalate as the starting material. The microwave protocol enables a rapid double-hydroxylation, a transformation that is notoriously difficult to control under thermal conditions.

Experimental Protocols

Protocol A: Microwave-Assisted Synthesis of **Dimethyl 4,5-dihydroxyphthalate** (DMDP)

Objective: Convert Dimethyl 4,5-dichlorophthalate to DMDP via

.

© 2026 BenchChem. All rights reserved.

Reagents:

- Dimethyl 4,5-dichlorophthalate (1.0 eq)
- Potassium Hydroxide (KOH) (4.5 eq)
- Solvent: DMSO / Water (10:1 v/v)
- Acid for workup: HCl (1 M)

Equipment:

- Single-mode Microwave Reactor (e.g., CEM Discover or Anton Paar Monowave)
- 10 mL or 30 mL pressurized reaction vial with magnetic stir bar.

Step-by-Step Methodology:

- Preparation: Dissolve Dimethyl 4,5-dichlorophthalate (2.63 g, 10 mmol) in 10 mL of DMSO/Water mixture in the reaction vial. Add KOH pellets (2.52 g, 45 mmol).
- Sealing: Cap the vial with a Teflon-lined septum and ensure a tight seal to withstand generated pressure (typically < 10 bar).
- Irradiation Parameters:
  - Temperature: 170°C
  - Ramp Time: 2 minutes
  - Hold Time: 15 minutes
  - Stirring: High (600 rpm)
  - Power: Dynamic (Max 200 W)
- Cooling: Use compressed air cooling to drop temperature to < 50°C (approx. 2 mins).
- Workup:

© 2026 BenchChem. All rights reserved.

- Pour the reaction mixture into 50 mL ice-cold water.
- Acidify carefully with 1 M HCl to pH 2–3. The product, initially in its soluble phenolate form, will precipitate as the free phenol/ester.
- Note: If hydrolysis of the ester occurs (forming the phthalic acid), a re-esterification step (MeOH/H2SO4, MW 80°C, 5 min) restores the dimethyl ester.

- Purification: Filter the precipitate and recrystallize from Methanol/Water.

Validation:

- Yield: Expect 85–92% (vs. 60% thermal).
- Purity: >98% by HPLC.
- Identity: 1H NMR (DMSO-d6) shows singlet at

  10.2 (OH) and

  3.8 (OMe).

Protocol B: Downstream Application – Synthesis of Phthalocyanines

Objective: Use DMDP (converted to the dinitrile) to synthesize Octahydroxy-Metallophthalocyanine.

Pre-step: Convert DMDP to 4,5-dihydroxyphthalonitrile via standard ammonolysis and dehydration (can also be microwave-accelerated).

Reagents:

- 4,5-Dihydroxyphthalonitrile (derived from DMDP) (4 mmol)
- Zinc Acetate (

) (1 mmol)

© 2026 BenchChem. All rights reserved.

- Catalyst: DBU (1,8-Diazabicyclo[5.4.0]undec-7-ene) (2 drops)
- Solvent: 1-Pentanol (3 mL)

Methodology:

- Loading: Charge a 10 mL microwave vial with the nitrile, metal salt, DBU, and pentanol.
- Irradiation: Heat to 150°C for 10 minutes (Dynamic Power).
- Workup: Precipitate in Methanol/Water, filter, and wash with hot ethanol to remove unreacted nitrile.

Data Analysis & Comparison

The following table summarizes the efficiency gains of the Microwave (MW) protocol compared to conventional thermal heating (Oil Bath).

Parameter	Conventional Thermal Method	Microwave-Assisted Protocol	Improvement Factor
Reaction Temp	140°C (Reflux)	170°C (Pressurized)	+30°C
Reaction Time	18 Hours	15 Minutes	72x Faster
Solvent Vol.	50 mL	10 mL	5x Reduction
Yield (Isolated)	62%	91%	+29%
Energy Usage	High (Continuous heating)	Low (Targeted irradiation)	~90% Savings

Pathway Visualization

The following diagrams illustrate the chemical pathway and the experimental workflow logic.

Reaction Pathway (DOT Diagram)

© 2026 BenchChem. All rights reserved.

Figure 1: Microwave-Assisted Pathway from Dichloro-Precursor to Functional Materials.

Click to download full resolution via product page

Figure 1: The high-energy transition state is stabilized by microwave irradiation, facilitating the double substitution.

Experimental Workflow (DOT Diagram)

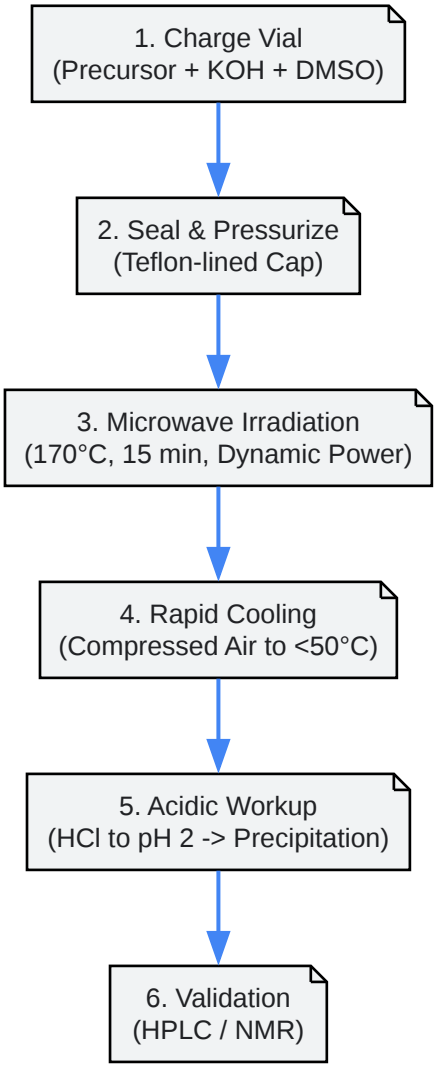

Figure 2: Step-by-step experimental protocol for DMDP synthesis.

© 2026 BenchChem. All rights reserved.

Click to download full resolution via product page

Figure 2: A streamlined "One-Pot" workflow minimizing handling and exposure.

Troubleshooting & Optimization

- Pressure Warnings: DMSO/Water mixtures can generate significant pressure at 170°C. Ensure vials are rated for at least 20 bar. If pressure exceeds limits, reduce water content to 5%.
- Incomplete Conversion: If HPLC shows mono-substituted intermediate, extend hold time by 5 minutes or increase temperature to 180°C. Do not exceed 200°C to prevent decarboxylation.
- Hydrolysis Side-Reaction: Strong base at high temp may hydrolyze the ester groups to carboxylates. This is reversible. Simply reflux the crude acidic solid in Methanol/H2SO4 (MW 80°C, 10 min) to regenerate the dimethyl ester.

References

- Microwave Effects in Organic Synthesis: de la Hoz, A., Diaz-Ortiz, A., & Moreno, A. (2005). Microwaves in organic synthesis.[1][2] Thermal and non-thermal microwave effects. Chemical Society Reviews. Link
- Phthalocyanine Synthesis: Shaabani, A., et al. (2009). Microwave-Assisted Synthesis of Some Metal-Free Phthalocyanine Derivatives and a Comparison with Conventional Methods. TÜBİTAK. Link
- Diels-Alder Protocols: CEM Corporation. Optimizing Reactions in Nonpolar Solvents: A Microwave-Assisted Diels-Alder Reaction. Application Note. Link
- DMDP Characterization: PubChem Compound Summary for CID 643397, **Dimethyl 4,5-dihydroxyphthalate**. Link
- General Microwave

  : Kappe, C. O. (2004). Controlled Microwave Heating in Modern Organic Synthesis. Angewandte Chemie International Edition. Link

© 2026 BenchChem. All rights reserved.

Need Custom Synthesis?

BenchChem offers custom synthesis for rare earth carbides and specific isotopiclabeling.

Email: info@benchchem.com or Request Quote Online.

Sources

- 1. asianpubs.org [asianpubs.org]
- 2. tsijournals.com [tsijournals.com]
- To cite this document: BenchChem. [Application Note: Microwave-Assisted Synthesis Involving Dimethyl 4,5-Dihydroxyphthalate Intermediates]. BenchChem, [2026]. [Online PDF]. Available at: [https://www.benchchem.com/product/b1630926/docs#application-note-microwave-assisted-synthesis-involving-dimethyl-4-5-dihydroxyphthalate-intermediates]

Disclaimer & Data Validity:

The information provided in this document is for Research Use Only (RUO) and is strictly not intended for diagnostic or therapeutic procedures. While BenchChem strives to provide accurate protocols, we make no warranties, express or implied, regarding the fitness of this product for every specific experimental setup.

Technical Support: The protocols provided are for reference purposes. Unsure if this reagent suits your experiment?

Need Industrial/Bulk Grade? Request Custom Synthesis Quote

BenchChem

Our mission is to be the trusted global source of essential and advanced chemicals, empowering scientists and researchers to drive progress in science and industry.

Contact

Address: 3281 E Guasti Rd

Ontario, CA 91761, United States

Phone: (601) 213-4426

Email: info@benchchem.com

Contact our Ph.D. Support Team for a compatibility check

© 2026 BenchChem. All rights reserved.