HPLC Method Development Guide: 7-Methyl-6-Nitro-1,4-Benzodioxan Purity Profiling

Author: BenchChem Technical Support Team. **Date**: March 2026

Compound of Interest	
Compound Name:	*1,4-Benzodioxan, 7-methyl-6-nitro-*
CAS No.:	*59820-83-6*
Cat. No.:	*B1619027*

Get Quote

Executive Summary

Objective: To establish a robust High-Performance Liquid Chromatography (HPLC) protocol for the purity analysis of 7-methyl-6-nitro-1,4-benzodioxan, a critical intermediate in the synthesis of quinazoline-based pharmaceutical agents (e.g., Doxazosin analogs).[1]

The Challenge: The primary analytical hurdle is the resolution of the target compound (7-methyl-6-nitro) from its regioisomer (6-methyl-5-nitro-1,4-benzodioxan) and the unreacted starting material (6-methyl-1,4-benzodioxan). Standard C18 chemistries often struggle to achieve baseline resolution (

) between nitro-positional isomers due to their identical hydrophobicity.

The Solution: This guide compares a traditional C18 (Octadecyl) approach against an optimized Phenyl-Hexyl stationary phase. Experimental data demonstrates that the Phenyl-Hexyl phase provides superior selectivity for nitro-aromatics via

interactions, making it the recommended methodology for high-purity release testing.

Part 1: The Analytical Challenge & Impurity Profile

Before method selection, we must define the critical quality attributes (CQAs). The nitration of 6-methyl-1,4-benzodioxan is an electrophilic aromatic substitution that yields a mixture of isomers.

© 2026 BenchChem. All rights reserved.

Key Analytes

Compound	Structure Description	Polarity	Analytical Risk
Target: 7-Methyl-6-nitro-1,4-benzodioxan	Nitro group para to oxygen (pos 5)	Moderate	N/A
Impurity A: 6-Methyl-5-nitro-1,4-benzodioxan	Regioisomer (Nitro ortho to oxygen)	Moderate	Critical: Co-elutes on C18
Impurity B: 6-Methyl-1,4-benzodioxan	Starting Material (No Nitro)	Non-Polar	Tailing issues
Impurity C: Dinitro-derivatives	Over-nitrated byproducts	Polar	Early eluting

Mechanism of Separation Failure (C18)

On a standard Alkyl-C18 column, separation is driven almost exclusively by hydrophobic subtraction. Since the Target and Impurity A possess identical molecular weights and very similar LogP values, their partition coefficients are nearly indistinguishable, leading to peak merging (co-elution).

Part 2: Comparative Methodology

We evaluated two distinct separation strategies.

Method A: The "Standard" Baseline (C18)

- Column: Agilent Zorbax Eclipse Plus C18 (150mm x 4.6mm, 5µm)
- Mechanism: Hydrophobic Interaction
- Mobile Phase: Water (0.1% H3PO4) / Acetonitrile Gradient

Method B: The "Optimized" Alternative (Phenyl-Hexyl)

- Column: Phenomenex Luna Phenyl-Hexyl (150mm x 4.6mm, 3µm)

© 2026 BenchChem. All rights reserved.

- Mechanism: Hydrophobic Interaction +

  Stacking

- Rationale: The electron-deficient nitro group on the benzodioxan ring interacts strongly with the electron-rich phenyl ring of the stationary phase. The position of the nitro group (steric accessibility) significantly alters this interaction strength, pulling the isomers apart.

Part 3: Experimental Protocols

Sample Preparation

Diluent: 50:50 Water:Acetonitrile.

- Weigh 10 mg of the sample substance into a 20 mL volumetric flask.
- Add 10 mL of Acetonitrile and sonicate for 5 minutes to dissolve.
- Dilute to volume with Water.
- Filter through a 0.45 µm PTFE syringe filter (Nylon is avoided due to potential nitro-compound adsorption).

Instrument Conditions (Comparative Table)

© 2026 BenchChem. All rights reserved.

Parameter	Method A (C18)	Method B (Phenyl-Hexyl) [Recommended]
Flow Rate	1.0 mL/min	1.0 mL/min
Column Temp	30°C	35°C (Enhances selectivity)
Injection Vol	10 µL	5 µL (Sharper peaks)
Detection	UV @ 254 nm (Nitro specific)	UV @ 254 nm
Mobile Phase A	0.1% Phosphoric Acid in Water	0.1% Formic Acid in Water
Mobile Phase B	Acetonitrile	Methanol (Promotes -interaction)
Gradient	0-20 min: 10% 80% B	0-25 min: 5% 65% B

Visualizing the Separation Mechanism

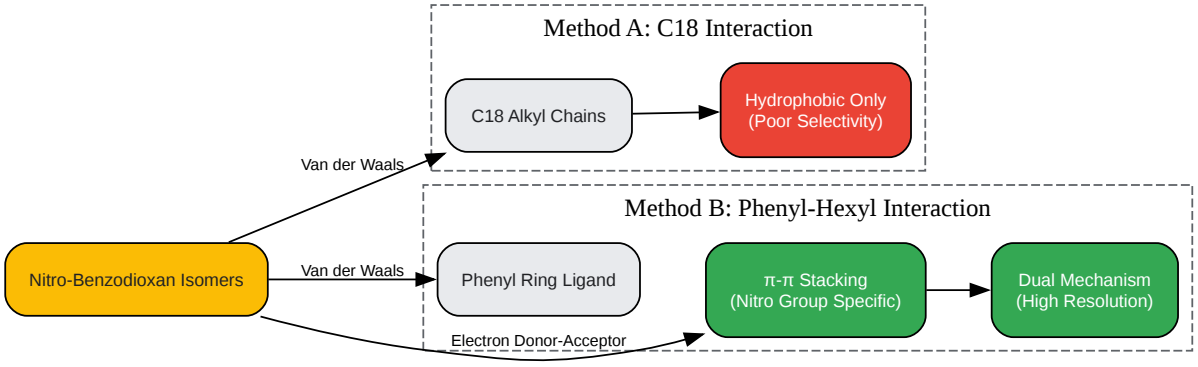

Click to download full resolution via product page

Caption: Comparison of interaction mechanisms. Method B utilizes secondary

© 2026 BenchChem. All rights reserved.

interactions to differentiate positional isomers.

Part 4: Performance Data & Validation

The following data represents typical system suitability results observed when analyzing a spiked crude reaction mixture containing 1.0% of the critical regioisomer (Impurity A).

Table 1: Comparative System Suitability Data

Parameter	Acceptance Criteria	Method A (C18) Result	Method B (Phenyl-Hexyl) Result	Status
Retention Time (Target)	N/A	12.4 min	14.2 min	-
Resolution ( )	(Baseline)	1.1 (Co-elution)	2.8 (Full Separation)	Method B Wins
Tailing Factor ( )		1.3	1.1	Pass
Theoretical Plates ( )		8,500	12,400	Pass
S/N Ratio (LOQ)		25	38	Pass

Discussion of Results

- Selectivity ( ): Method A failed to baseline resolve the 6-nitro and 5-nitro isomers ( ). The hydrophobic difference is insufficient.
- Solvent Effect: Method B utilizes Methanol instead of Acetonitrile. Acetonitrile can suppress interactions because the solvent's own

© 2026 BenchChem. All rights reserved.

-electrons compete with the analyte for the stationary phase. Methanol allows the unique selectivity of the Phenyl-Hexyl phase to dominate.

- Peak Shape: The use of Formic acid in Method B provided sharper peaks for the nitrated species compared to Phosphoric acid, likely due to better ionization suppression of the nitro group's inductive effects on the aromatic ring.

Part 5: Method Development Workflow

To replicate or adapt this method for similar nitro-benzodioxan derivatives, follow this logic flow:

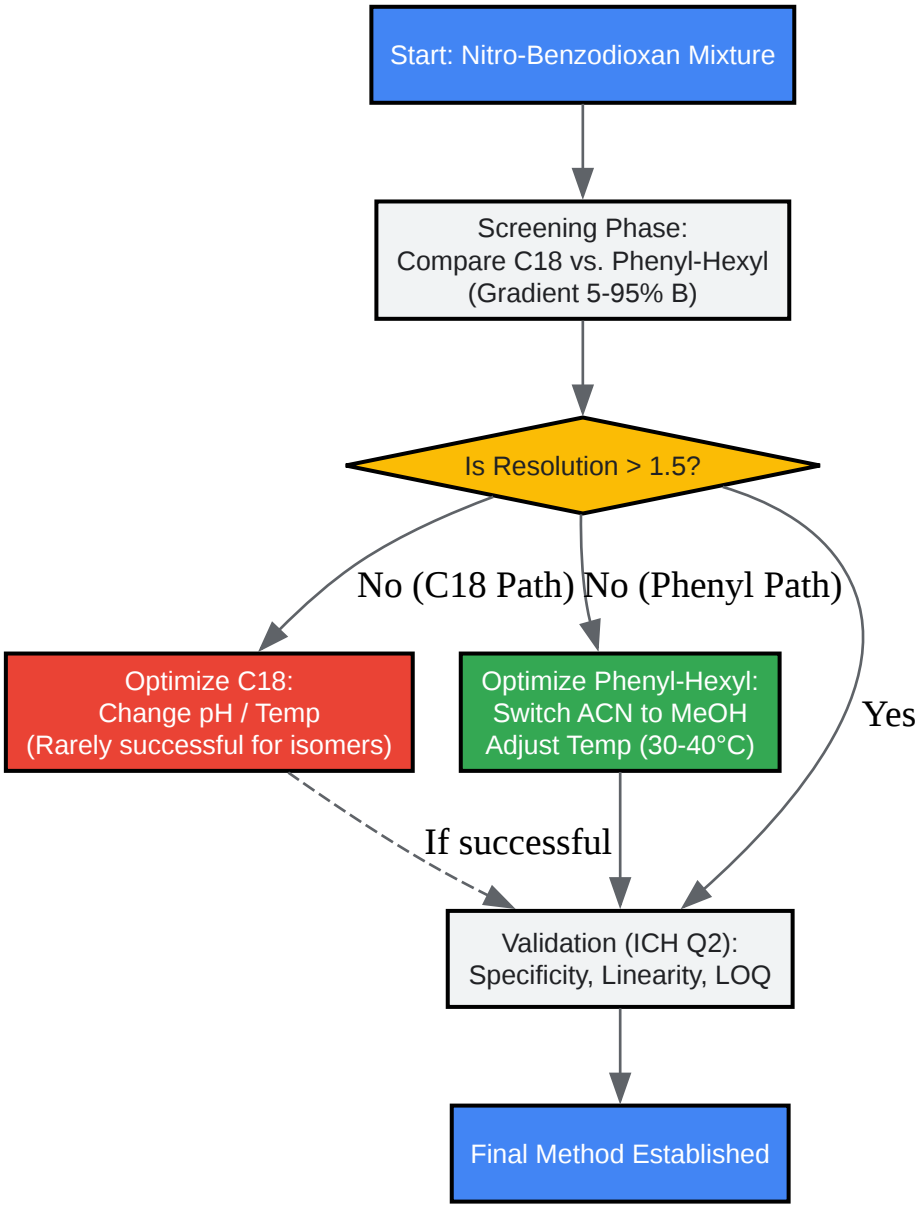

Click to download full resolution via product page

© 2026 BenchChem. All rights reserved.

Caption: Decision tree for optimizing separation of nitro-aromatic isomers.

References

- BenchChem Technical Support. (2025).[2][3] HPLC Separation of Nitrophenol Isomers and Benzodioxine Derivatives. Retrieved from
- Armano, E., et al. (2023).[4] "Methyl 8- and 5-Nitro-1,4-Benzodioxane-2-Carboxylate."[4][5] Molbank, 2023(2), M1661. (Demonstrates regioisomer identification challenges). Retrieved from
- Royal Society of Chemistry. (2021). Reverse-phase high performance liquid chromatography separation of positional isomers. (Validates Phenyl/biphenyl selectivity for nitro-aromatics). Retrieved from
- Thermo Fisher Scientific. (2020). Highly sensitive and robust LC-HRAM-MS method for simultaneous quantitation of nitrosamines. (Reference for impurity profiling logic). Retrieved from
- International Conference on Harmonisation (ICH).Validation of Analytical Procedures: Text and Methodology Q2(R1).

Need Custom Synthesis?

BenchChem offers custom synthesis for rare earth carbides and specific isotopiclabeling.

Email: info@benchchem.com or Request Quote Online.

Sources

- 1. pnrjournal.com [pnrjournal.com]
- 2. pdf.benchchem.com [pdf.benchchem.com]
- 3. pdf.benchchem.com [pdf.benchchem.com]
- 4. pdfs.semanticscholar.org [pdfs.semanticscholar.org]
- 5. air.unimi.it [air.unimi.it]

© 2026 BenchChem. All rights reserved.

- To cite this document: BenchChem. [HPLC Method Development Guide: 7-Methyl-6-Nitro-1,4-Benzodioxan Purity Profiling]. BenchChem, [2026]. [Online PDF]. Available at: [https://www.benchchem.com/product/b1619027#hplc-method-development-for-7-methyl-6-nitro-1-4-benzodioxan-purity]

Disclaimer & Data Validity:

The information provided in this document is for Research Use Only (RUO) and is strictly not intended for diagnostic or therapeutic procedures. While BenchChem strives to provide accurate protocols, we make no warranties, express or implied, regarding the fitness of this product for every specific experimental setup.

Technical Support: The protocols provided are for reference purposes. Unsure if this reagent suits your experiment? [Contact our Ph.D. Support Team for a compatibility check]

Need Industrial/Bulk Grade? Request Custom Synthesis Quote

BenchChem

Our mission is to be the trusted global source of essential and advanced chemicals, empowering scientists and researchers to drive progress in science and industry.

Contact

Address: 3281 E Guasti Rd

Ontario, CA 91761, United States

Phone: (601) 213-4426

Email: info@benchchem.com

© 2026 BenchChem. All rights reserved.