Comparative Analysis of Norepinephrine Reuptake Inhibitors on Cognitive Function

Author: BenchChem Technical Support Team. **Date**: April 2026

Compound of Interest

Compound Name:	*Tampramine*
CAS No.:	*83166-17-0*
Cat. No.:	*B1615395*

Get Quote

An Objective Guide for Researchers and Drug Development Professionals

The following guide provides a comparative analysis of established Norepinephrine Reuptake Inhibitors (NRIs) and their effects on cognitive function, drawing upon available clinical data. As direct head-to-head studies for a compound named "**Tampramine**" are not publicly available, this comparison focuses on well-documented NRIs such as Reboxetine and Atomoxetine, which serve as crucial benchmarks in the field. This guide is intended to provide researchers, scientists, and drug development professionals with a concise overview of the existing evidence, methodologies, and biological pathways associated with these compounds.

Quantitative Data Summary

The cognitive effects of NRIs have been evaluated in various clinical studies, assessing domains such as attention, memory, and executive function. The following tables summarize key findings from studies on Reboxetine and Atomoxetine.

Table 1: Effects of Reboxetine on Cognitive Function in Major Depressive Disorder (MDD)

© 2026 BenchChem. All rights reserved.

Cognitive Domain	Assessment Tool	Dosage	Treatment Duration	Outcome vs. Placebo/Comparator	Significance
Sustained Attention	Cognitive Drug Research (CDR) System - Digit Vigilance	8-10 mg/day	56 days	Improved ability to sustain attention compared with baseline.[1]	P = 0.023[1]
Speed of Cognitive Function	CDR System - Choice Reaction Time	8-10 mg/day	56 days	Significant improvements in speed of cognitive functioning compared to baseline.[1]	P = 0.024[1]
General Cognitive Function	Psychometric Test Battery	0.5 mg, 1 mg, or 4 mg	Single Dose	Little to no effect on performance compared with placebo.[2]	Not Statistically Significant
Psychomotor Performance	Psychometric Test Battery	0.5 mg, 1 mg, or 4 mg	Single Dose	Free from disruptive effects on psychomotor performance.	Not Statistically Significant

Table 2: Effects of Atomoxetine on Cognitive Function in Attention-Deficit/Hyperactivity Disorder (ADHD)

© 2026 BenchChem. All rights reserved.

Cognitive Domain	Assessment Tool	Dosage	Treatment Duration	Outcome vs. Placebo	Significance
ADHD Symptoms (Inattention)	Conners' Adult ADHD Rating Scale (CAARS)	25-100 mg/day	26 weeks	Statistically significant symptom reduction from week 1.	P ≤ 0.006 at 1 week
Executive Function	Behavior Rating Inventory of Executive Function–Adult Version (BRIEF-A)	80-100 mg/day	24 weeks, plus 6-month follow-up	Significantly better T-scores than placebo at 3 and 6 months post-randomization.	Statistically Significant
Response Inhibition	Not Specified	Single Dose	Single Dose	Improved inhibitory control.	Not Specified
Attention	Various cognitive tests	Not Specified	1-8 weeks	Most effective at improving attention.	Statistically Significant
Working Memory	Not Specified	Single Dose	Single Dose	Some working memory issues persisted.	Not Specified

Experimental Protocols

Understanding the methodologies behind these findings is critical for interpretation and future study design. Below are detailed protocols from key cited experiments.

Reboxetine Study in MDD Patients

© 2026 BenchChem. All rights reserved.

- Study Design: A randomized, double-blind, placebo- and active-treatment-controlled study.
- Participants: 74 adult patients (aged 18-65 years) with a confirmed diagnosis of Major Depressive Disorder (MDD) according to DSM-IV criteria.
- Treatment Arms:
  - Reboxetine (n=25): 8-10 mg/day
  - Paroxetine (n=23): 20-40 mg/day (active comparator)
  - Placebo (n=26)
- Duration: 8 weeks.
- Cognitive Assessment: The Cognitive Drug Research (CDR) computerized assessment system was used at baseline, day 14, and day 56. The tasks included:
  - Simple Reaction Time
  - Digit Vigilance
  - Choice Reaction Time
  - Numeric Working Memory
  - Word Recognition
  - Critical Flicker Fusion

Atomoxetine Study in Adult ADHD Patients (Pooled Analysis)

- Study Design: Pooled data from two randomized, double-blind, placebo-controlled studies.
- Participants: Adults aged 18-54 years meeting DSM-IV-TR criteria for adult ADHD.
- Treatment Arms (Pooled):

© 2026 BenchChem. All rights reserved.

- Atomoxetine (n=518): Dosed at 25, 40, 60, 80 (target dose), or 100 mg daily.
- Placebo (n=485)

- Duration: 26 weeks.
- Primary Efficacy Measures:
  - Change from baseline in Conners' Adult ADHD Rating Scale–Investigator Rated Scale: Screening Version (CAARS) total ADHD symptoms score.
  - Adult ADHD Investigator Symptom Rating Scale (AISRS) total score.
- Assessment Schedule: Assessments were conducted at weeks 1, 2, 4, 8, 12, 16, 22, and 26.
- Statistical Analysis: Mixed-model repeated measures were used to analyze the change from baseline in CAARS and AISRS scores.

Signaling Pathways and Experimental Workflows

The therapeutic effects of NRIs on cognition are mediated by their action on the norepinephrine transporter (NET), leading to increased synaptic concentrations of norepinephrine, particularly in brain regions critical for cognitive processes like the prefrontal cortex.

Norepinephrine Reuptake Inhibition Signaling Pathway

© 2026 BenchChem. All rights reserved.

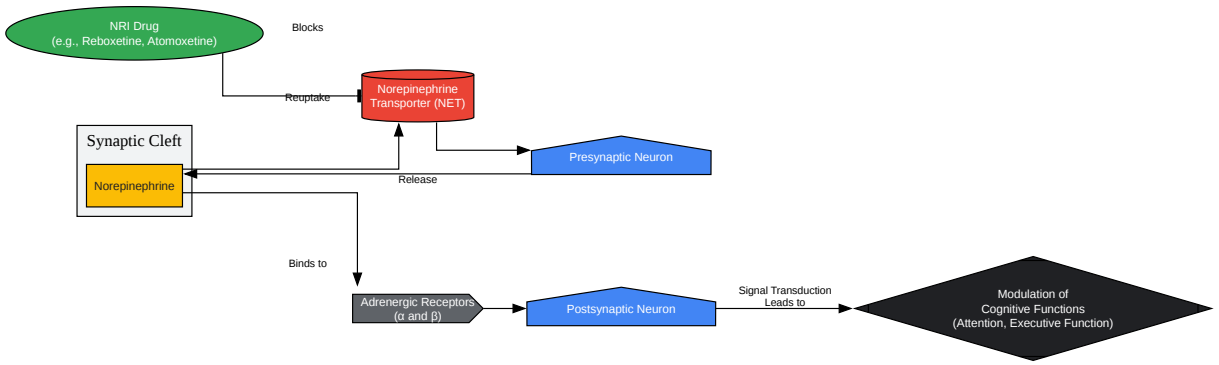

Click to download full resolution via product page

Caption: Mechanism of action for Norepinephrine Reuptake Inhibitors (NRIs).

Experimental Workflow for a Double-Blind, Placebo-Controlled Trial

© 2026 BenchChem. All rights reserved.

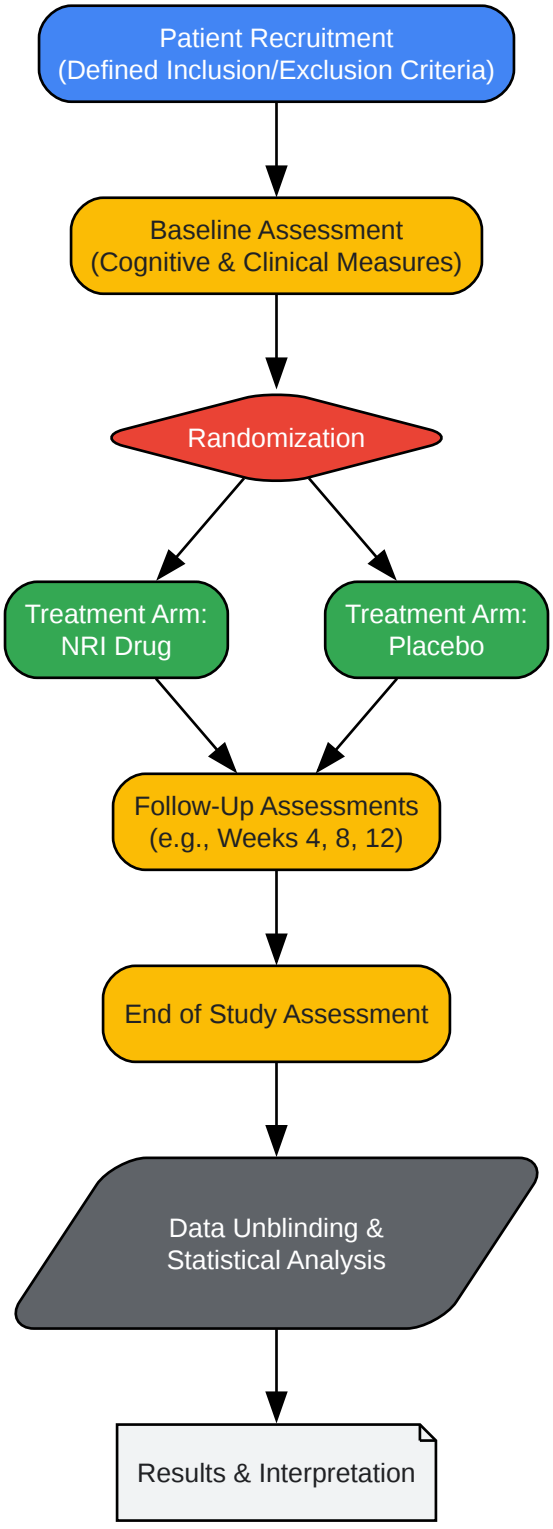

Click to download full resolution via product page

Caption: Generalized workflow for a randomized clinical trial of an NRI.

© 2026 BenchChem. All rights reserved.

Need Custom Synthesis?

BenchChem offers custom synthesis for rare earth carbides and specific isotopiclabeling.

Email: info@benchchem.com or Request Quote Online.

References

- 1. Reboxetine versus paroxetine versus placebo: effects on cognitive functioning in depressed patients - PubMed [pubmed.ncbi.nlm.nih.gov]
- 2. The effects of reboxetine and amitriptyline, with and without alcohol on cognitive function and psychomotor performance - PubMed [pubmed.ncbi.nlm.nih.gov]
- To cite this document: BenchChem. [Comparative Analysis of Norepinephrine Reuptake Inhibitors on Cognitive Function]. BenchChem, [2026]. [Online PDF]. Available at: [https://www.benchchem.com/product/b1615395/docs#comparative-analysis-of-norepinephrine-reuptake-inhibitors-on-cognitive-function]

Disclaimer & Data Validity:

The information provided in this document is for Research Use Only (RUO) and is strictly not intended for diagnostic or therapeutic procedures. While BenchChem strives to provide accurate protocols, we make no warranties, express or implied, regarding the fitness of this product for every specific experimental setup.

Technical Support: The protocols provided are for reference purposes. Unsure if this reagent suits your experiment?

Need Industrial/Bulk Grade? Request Custom Synthesis Quote

BenchChem

Our mission is to be the trusted global source of essential and advanced chemicals, empowering scientists and researchers to drive progress in science and industry.

Contact

Address: 3281 E Guasti Rd

Ontario, CA 91761, United States

Phone: (601) 213-4426

Email: info@benchchem.com

Contact our Ph.D. Support Team for a compatibility check

© 2026 BenchChem. All rights reserved.