Technical Support Center: Phenyl Propyl Sulfide Analysis

Author: BenchChem Technical Support Team. **Date**: May 2026

Compound of Interest

Compound Name:	*Phenyl propyl sulfide*
CAS No.:	*874-79-3*
Cat. No.:	*B1614682*

Get Quote

Welcome to the technical support guide for the identification of impurities in **Phenyl propyl sulfide** ($C_9H_{12}S$) by Gas Chromatography-Mass Spectrometry (GC-MS). This resource is designed for researchers, scientists, and drug development professionals to navigate the complexities of analyzing sulfur-containing aromatic compounds. We will address common experimental challenges and provide in-depth, field-proven solutions to ensure the integrity and accuracy of your analytical results.

Troubleshooting Guide: From Problem to Resolution

This section addresses specific issues you may encounter during your GC-MS analysis. The key to effective troubleshooting is a systematic approach: isolate the problem, change one variable at a time, and document your findings.[1][2]

Q1: Why is my **Phenyl propyl sulfide** peak exhibiting significant tailing?

Answer:

Peak tailing for sulfur-containing compounds is a classic indicator of unwanted interactions between the analyte and active sites within the GC system. The sulfur atom in **Phenyl propyl sulfide** has lone pair electrons that can form hydrogen bonds with acidic silanol groups (Si-OH) present on the surface of untreated glass liners, column cuts, or contaminated areas of the column itself. This adsorption causes a portion of the analyte molecules to lag behind the main band, resulting in a tailed peak shape.[2][3]

Step-by-Step Resolution Protocol:

- Isolate the Source: First, determine if the issue originates in the injector or the column. Inject a non-polar, non-active compound like an alkane. If the alkane peak is symmetrical, the problem is likely isolated to analyte-specific interactions, pointing towards active sites affecting your sulfide compound.
- Inlet Maintenance: The injector is the most common source of activity.[1]
  - Action: Replace the inlet liner with a new, deactivated liner. Ultra Inert (UI) or equivalent liners are specifically treated to cap silanol groups, providing a smooth, non-interactive surface.[4]
  - Verification: After replacing the liner and septum, run a solvent blank followed by your **Phenyl propyl sulfide** standard. A significant improvement in peak shape confirms the liner was the primary cause.
- Column Maintenance: If tailing persists, the issue may be at the front of the analytical column.
  - Action: Trim the column. Remove approximately 10-15 cm from the inlet side of the column. This removes non-volatile residues and active sites that accumulate over time. Ensure the cut is perfectly square.[2]
  - Verification: Reinstall the column, ensuring the correct installation depth into the MS transfer line to avoid dead volume.[2] Re-run your standard.
- Column Evaluation: If tailing is still present after these steps, the column itself may be damaged or degraded due to oxygen exposure at high temperatures.

© 2026 BenchChem. All rights reserved.

- Action: Check for leaks in your carrier gas line and ensure high-purity gas with oxygen traps is in use.[5][6] If the column is old or has been subjected to harsh conditions, it may need to be replaced.

Q2: I'm observing "ghost peaks" in my chromatogram, even during blank runs. What are they and how do I get rid of them?

Answer:

Ghost peaks are extraneous peaks that appear in your analysis when they are not present in the injected sample. They typically arise from two main sources: sample carryover from a previous, more concentrated injection, or bleed from system components like the injector septum.[7]

Step-by-Step Resolution Protocol:

- Diagnose the Source:
  - Action: Run a "no-injection" blank. This means running your method without a physical injection. If the ghost peaks disappear, the issue is likely carryover from the syringe. If they remain, the source is within the GC system (septum, liner, or column contamination).
  - Action: Run a solvent blank. If the ghost peaks are present and sharp, it suggests carryover. If they are broad and elute late, it is more indicative of column bleed or contamination.
- Eliminate Carryover:
  - Action: Improve syringe washing. Increase the number of pre- and post-injection washes with a strong solvent. Ensure your wash solvent is clean and replaced frequently.
  - Action: If carryover is severe, inject a large volume of a high-boiling point, clean solvent to "flush" the injector and the front of the column.
- Address System Contamination:

© 2026 BenchChem. All rights reserved.

- Action: Replace the injector septum. Septa degrade over time and with repeated punctures, releasing siloxanes or other volatile compounds. Use high-quality, low-bleed septa. A common indicator of septum bleed is the presence of characteristic ions like m/z 207 and 281 in the mass spectrum of the ghost peak.[5]

- Action: Bake out the system. Set the injector temperature to its maximum allowed value and the oven temperature to just below the column's maximum limit (as specified by the manufacturer) for 1-2 hours with carrier gas flowing. Do not exceed the column's temperature limit.

Q3: My sensitivity is poor and my MS tune report shows high levels of water (m/z 18), nitrogen (m/z 28), and oxygen (m/z 32). Are these related?

Answer:

Yes, these issues are strongly related. High levels of m/z 18, 28, and 32 in your MS background are classic signs of a leak in the system. The mass spectrometer operates under a high vacuum, and any leak will allow air to enter. Oxygen is particularly damaging as it can oxidize the ion source filaments, reducing their lifespan and efficiency. Furthermore, the presence of these background gases elevates the noise floor and suppresses the ionization of your target analytes, leading directly to poor sensitivity.[2]

Troubleshooting Workflow for Leaks and Sensitivity:

© 2026 BenchChem. All rights reserved.

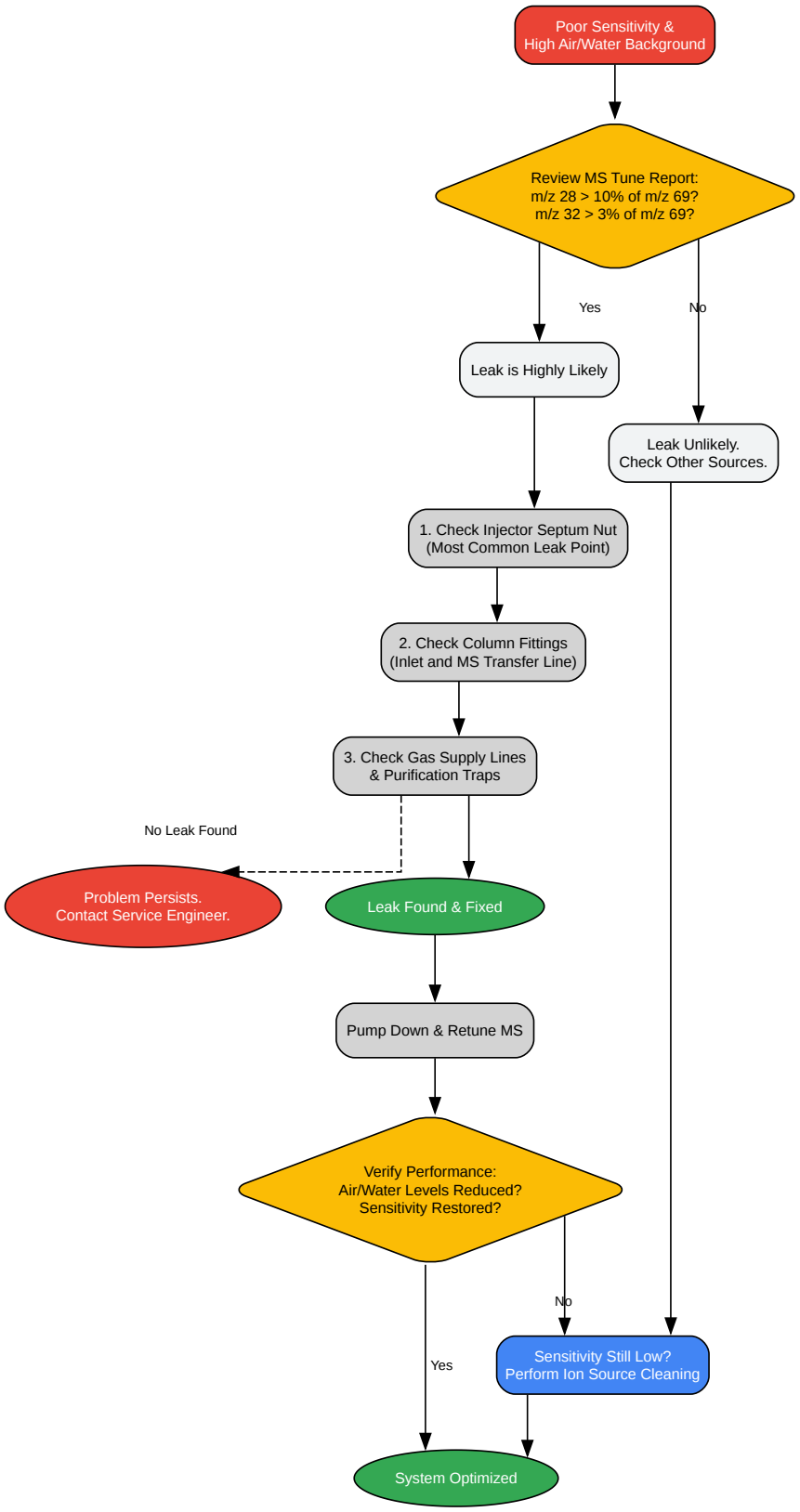

Click to download full resolution via product page

Caption: A systematic workflow for diagnosing and resolving GC-MS sensitivity issues.

© 2026 BenchChem. All rights reserved.

Frequently Asked Questions (FAQs)

Q: What are the most likely impurities in my **Phenyl propyl sulfide** sample?

A: Impurities typically originate from the synthesis process (unreacted starting materials or side-reactions) or degradation (oxidation).[8][9] For **Phenyl propyl sulfide**, which is often synthesized from thiophenol and a propyl halide, you should primarily look for:

Impurity Name	Molecular Formula	Molecular Weight (g/mol)	Common Source
Thiophenol	C_6H_6S	110.18	Unreacted starting material
Diphenyl disulfide	$C_{12}H_{10}S_2$	218.34	Oxidative coupling of thiophenol
Dipropyl disulfide	$C_6H_{14}S_2$	150.31	Side reaction from propylthiol precursor
Phenyl propyl sulfoxide	$C_9H_{12}SO$	168.26	Oxidation of the final product
Phenyl propyl sulfone	$C_9H_{12}SO_2$	184.26	Further oxidation of the product

Q: What is the expected mass spectrum and fragmentation pattern for **Phenyl propyl sulfide**?

A: Under standard Electron Ionization (EI) at 70 eV, **Phenyl propyl sulfide** (MW = 152.26) will produce a distinct fragmentation pattern. The presence of the aromatic ring leads to a prominent molecular ion peak.[10][11]

Predicted Fragmentation Pathway:

© 2026 BenchChem. All rights reserved.

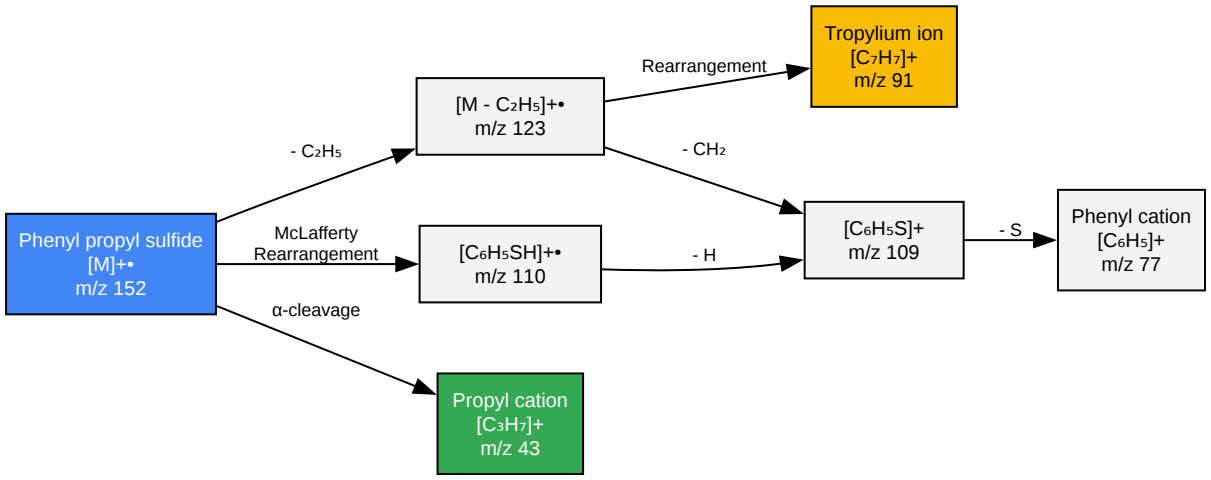

Click to download full resolution via product page

Caption: Predicted EI fragmentation pathway for **Phenyl propyl sulfide**.

Key Diagnostic Ions:

© 2026 BenchChem. All rights reserved.

m/z	Ion Identity	Fragmentation Process
152	$[C_9H_{12}S]^{+\cdot}$	Molecular Ion (M^+)
123	$[M - C_2H_5]^+$	Loss of an ethyl radical from the propyl chain (β-cleavage)
110	$[C_6H_5SH]^{+\cdot}$	Thiophenol ion via McLafferty-type rearrangement
109	$[C_6H_5S]^+$	Phenylthio cation from cleavage of the S-propyl bond (α-cleavage)
91	$[C_7H_7]^+$	Tropylium ion, a common rearrangement for alkylbenzenes[11]
77	$[C_6H_5]^+$	Phenyl cation from loss of sulfur from the phenylthio group
43	$[C_3H_7]^+$	Propyl cation from cleavage of the S-propyl bond (α-cleavage)

Q: What are the recommended starting GC-MS parameters for my analysis?

A: A general-purpose, non-polar column is an excellent starting point for separating **Phenyl propyl sulfide** and its likely impurities based on their boiling points. The following parameters provide a robust initial method.

© 2026 BenchChem. All rights reserved.

Parameter	Recommended Setting	Rationale
GC Column	Agilent HP-5ms, 30 m x 0.25 mm, 0.25 µm	A 5% phenyl-methylpolysiloxane phase offers excellent general-purpose separation for semi-volatile compounds and is robust for MS use.[8]
Carrier Gas	Helium	Inert gas, standard for GC-MS.
Flow Rate	1.2 mL/min (Constant Flow)	Optimal flow rate for balancing separation efficiency and analysis time with a 0.25 mm ID column.[5]
Inlet Temperature	250 °C	Ensures complete vaporization without causing thermal degradation.
Injection Mode	Split (e.g., 50:1)	Prevents column overloading and ensures sharp peaks for concentrated samples. Adjust ratio based on sample concentration.
Injection Volume	1 µL	Standard volume to avoid backflash and overloading.
Oven Program	50 °C (hold 1 min), then ramp 15 °C/min to 280 °C (hold 5 min)	Starts at a low temperature to trap volatile impurities, followed by a ramp to elute the main compound and higher-boiling impurities.
MS Transfer Line	280 °C	Prevents condensation of analytes before they enter the ion source.[5]
Ion Source Temp.	230 °C	Standard temperature for EI, balances ionization efficiency

© 2026 BenchChem. All rights reserved.

		with minimizing thermal degradation.[8]
Ionization Mode	Electron Ionization (EI) at 70 eV	Standard mode for creating reproducible, library-searchable mass spectra.[12]
Mass Scan Range	m/z 40 - 400	Covers the mass of the parent compound and its expected impurities and fragments.

References

- National Center for Biotechnology Information. (n.d.). **Phenyl propyl sulfide**. PubChem. Retrieved from [Link]
- Winn, D. (n.d.). Using GC–ICP-MS for Speciation of Sulfur in Reformulated Fuels. Spectroscopy Online. Retrieved from [Link]
- Campos, V., et al. (2010). Optimization of parameters of sampling and determination of reduced sulfur compounds using cryogenic capture and gas chromatography in tropical urban atmosphere. Semantic Scholar. Retrieved from [Link]
- LCGC International. (2013). Optimizing GC–MS Methods. Chromatography Online. Retrieved from [Link]
- Restek. (n.d.). Troubleshooting Guide. Retrieved from [Link]
- National Institute of Standards and Technology. (n.d.). Sulfide, phenyl 3-phenylpropyl. NIST WebBook. Retrieved from [Link]
- Agilent Technologies. (n.d.). Advanced GC Troubleshooting. Retrieved from [Link]
- Agilent Technologies. (2020). Optimizing Conditions for GC/MS Analyses. Retrieved from [Link]
- National Institute of Standards and Technology. (n.d.). Propyl sulfide. NIST WebBook. Retrieved from [Link]

© 2026 BenchChem. All rights reserved.

- Separation Science. (n.d.). How to Troubleshoot and Improve your GC/MS. Retrieved from [Link]
- ResearchGate. (2025). Py-GC/MS and MALDI-TOF/TOF CID study of poly(phenyl sulfone) fragmentation reactions. Retrieved from [Link]
- Shimadzu. (n.d.). Gas Chromatography Mass Spectrometry Troubleshooting Guide. Retrieved from [Link]
- Shimadzu. (n.d.). Monitoring of Sulfur Components by Simultaneous Analysis Using GC-MS and GC-SCD. Retrieved from [Link]
- PubMed Central. (n.d.). Spectral trends in GC-EI-MS data obtained from the SWGDRUG mass spectral library and literature: A resource for the identification of unknown compounds. Retrieved from [Link]
- Organic Syntheses. (n.d.). Phenyl vinyl sulfide. Retrieved from [Link]
- ResearchGate. (2025). Identification and Quantification of Related Impurities in 2-Chloroethyl Phenyl Sulfide for Industrial Use. Retrieved from [Link]
- Chemistry LibreTexts. (2023). Mass Spectrometry - Fragmentation Patterns. Retrieved from [Link]
- The Royal Society of Chemistry. (2017). The synthesis of poly(phenylene sulfide sulfone) in ionic liquids at atmospheric pressure. Retrieved from [Link]
- Michigan State University. (n.d.). Fragmentation and Interpretation of Spectra. Retrieved from [Link]

Need Custom Synthesis?

BenchChem offers custom synthesis for rare earth carbides and specific isotopiclabeling.

Email: info@benchchem.com or Request Quote Online.

Sources

- 1. sigmaaldrich.com [sigmaaldrich.com]
- 2. shimadzu.co.uk [shimadzu.co.uk]
- 3. How to Troubleshoot and Improve your GC/MS | Separation Science [sepscience.com]
- 4. agilent.com [agilent.com]
- 5. chromatographyonline.com [chromatographyonline.com]
- 6. phenomenex.blob.core.windows.net [phenomenex.blob.core.windows.net]
- 7. agilent.com [agilent.com]
- 8. benchchem.com [benchchem.com]
- 9. researchgate.net [researchgate.net]
- 10. Phenyl propyl sulfide | C9H12S | CID 13407 - PubChem [pubchem.ncbi.nlm.nih.gov]
- 11. whitman.edu [whitman.edu]
- 12. Spectral trends in GC-EI-MS data obtained from the SWGDRUG mass spectral library and literature: A resource for the identification of unknown compounds - PMC [pmc.ncbi.nlm.nih.gov]

- To cite this document: BenchChem. [Technical Support Center: Phenyl Propyl Sulfide Analysis]. BenchChem, [2026]. [Online PDF]. Available at: [https://www.benchchem.com/product/b1614682/docs#technical-support-center-phenyl-propyl-sulfide-analysis]

Disclaimer & Data Validity:

The information provided in this document is for Research Use Only (RUO) and is strictly not intended for diagnostic or therapeutic procedures. While BenchChem strives to provide accurate protocols, we make no warranties, express or implied, regarding the fitness of this product for every specific experimental setup.

Technical Support: The protocols provided are for reference purposes. Unsure if this reagent suits your experiment?

Need Industrial/Bulk Grade? Request Custom Synthesis Quote

© 2026 BenchChem. All rights reserved.

BenchChem

Our mission is to be the trusted global source of essential and advanced chemicals, empowering scientists and researchers to drive progress in science and industry.

Contact

Address: 3281 E Guasti Rd

Ontario, CA 91761, United States

Phone: (601) 213-4426

Email: info@benchchem.com

Contact our Ph.D. Support Team for a compatibility check

© 2026 BenchChem. All rights reserved.