Protocol for anionic polymerization of Methyl methacrylate-d5

Author: BenchChem Technical Support Team. **Date**: May 2026

Compound of Interest

Compound Name:	*Methyl methacrylate-d5*
CAS No.:	*55935-46-1*
Cat. No.:	*B1612595*

Get Quote

Application Note: High-Fidelity Anionic Polymerization of **Methyl Methacrylate-d5** (MMA-d5)

Part 1: Strategic Overview & Rationale

The "High-Stakes" Monomer **Methyl methacrylate-d5** (MMA-d5) is a deuterated isotopologue primarily utilized in Small Angle Neutron Scattering (SANS) to create contrast between domains in block copolymers or to silence proton signals in high-resolution NMR studies. Unlike standard MMA, MMA-d5 is cost-prohibitive (approx.

1,000/g). Consequently, the polymerization protocol must prioritize yield conservation and molecular weight control over speed.

The Method: Ligated Anionic Polymerization Standard free radical polymerization is unsuitable due to poor control over polydispersity (PDI) and end-group fidelity. This protocol utilizes Living Anionic Polymerization in Tetrahydrofuran (THF) at -78°C, mediated by a LiCl / 1,1-Diphenylhexyllithium (DPHLi) system.[1]

- Why DPHLi? Standard alkyllithiums (e.g., sec-BuLi) are too nucleophilic, attacking the carbonyl group of MMA (side reaction). DPHLi is sterically hindered and bulky, initiating

© 2026 BenchChem. All rights reserved.

exclusively at the vinyl group.

- Why LiCl? In polar solvents like THF, lithium ester enolates form aggregates (dimers/tetramers) that broaden PDI. LiCl acts as a

  -ligand, complexing with the lithium cation to break aggregates and stabilize the "living" chain end (Teyssié's Method).

Part 2: Reagent Architecture & Purification

The success of this protocol relies entirely on the removal of protic impurities (water, alcohols).

© 2026 BenchChem. All rights reserved.

Reagent	Grade	Purification Protocol (Critical)
MMA-d5	>99% D atom	1. Stir over powdered CaH_2 (24h, 0°C).2.High-Purity Option: Add Triethylaluminum ($AlEt_3$) dropwise until persistent yellow color (scavenges final protic impurities).3. Vacuum distill immediately before use.
THF	HPLC Grade	Reflux over Sodium/Benzophenone until deep purple. Distill directly into the reactor or storage ampoule.
LiCl	99.99%	Dry at 130°C under high vacuum (10^{-5} Torr) for 24h. Note: Hygroscopic.[2]
sec-BuLi	1.4M in Cyclohexane	Titrate using the Gilman double-titration method to determine exact active concentration.
1,1-Diphenylethylene (DPE)	98%	Distill over sec-BuLi or CaH_2 under vacuum. Store under Argon.
Methanol	Degassed	Sparged with Argon for 30 mins (Termination agent).

Part 3: Experimental Workflow

Phase 0: The "Dummy Run" (Self-Validation)

Crucial Advice: Before using MMA-d5, perform the entire protocol with non-deuterated MMA. This validates that your vacuum line, glovebox atmosphere, and technique are moisture-free. If

© 2026 BenchChem. All rights reserved.

the "Dummy" PDI is >1.10, do not proceed to the deuterated monomer.

Phase 1: Reactor Assembly & Solvent Blanking

- Apparatus: Flame-dried 250 mL round-bottom flask with a glass-coated magnetic stir bar, attached to a high-vacuum manifold or assembled in an Argon glovebox.
- LiCl Addition: Add dried LiCl (5–10 molar equivalents relative to initiator) to the flask.
- Solvent Transfer: Cryo-transfer 100 mL of purified THF into the flask.
- Blanking (Titration): Add sec-BuLi dropwise to the THF/LiCl mixture at -78°C until a faint, persistent pink color appears (indicating all impurities are scavenged). Allow to warm to room temperature to dissolve LiCl, then cool back to -78°C.

Phase 2: Initiator Generation (In-Situ)

The initiator, 1,1-Diphenylhexyllithium (DPHLi), is generated by reacting sec-BuLi with DPE.

- Calculations: Target

  .
- Addition: Add the calculated amount of DPE (1.2 equivalents relative to sec-BuLi) to the reactor.
- Reaction: Add the calculated dose of sec-BuLi.
- Observation: The solution will turn from Colorless

  Deep Red.
  - Validation: If the red color fades, impurities are present. Abort.

Phase 3: Propagation

- Cooling: Ensure reactor is stable at -78°C (Dry Ice/Acetone bath).
- Monomer Addition: Slowly add the purified MMA-d5 via syringe or break-seal ampoule.

© 2026 BenchChem. All rights reserved.

- The "Start" Signal: The solution will immediately change from Deep Red

  Colorless.

  - Mechanism:[2][3][4][5] The delocalized carbanion of DPHLi attacks the MMA, forming a tighter, colorless enolate ion pair.

- Time: Allow polymerization to proceed for 1 hour (conversion is typically rapid, <30 mins, but 1 hour ensures 100%).

Phase 4: Termination & Isolation

- Termination: Add degassed Methanol (2 mL).
- Precipitation: Pour the cold reaction mixture into a 10-fold excess of stirring Hexane or Petroleum Ether.
- Filtration: Collect the white precipitate.
- Drying: Dry in a vacuum oven at 40°C for 24 hours.

Part 4: Mechanism & Workflow Visualization

Figure 1: Reaction Mechanism Pathway

This diagram illustrates the chemical transformation from the precursor initiator to the living polymer chain.

© 2026 BenchChem. All rights reserved.

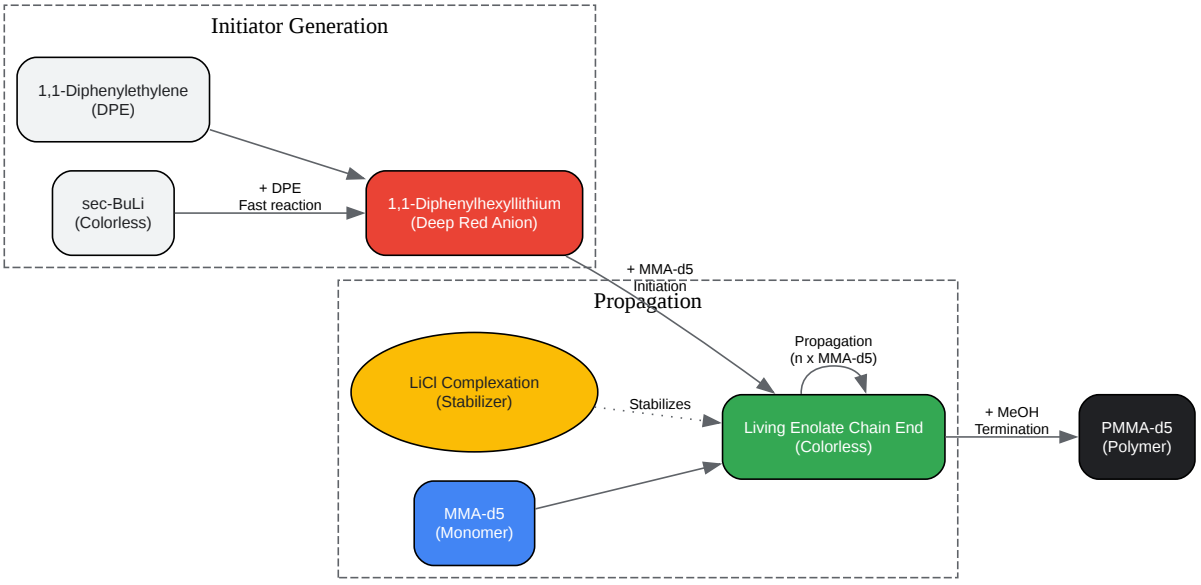

Click to download full resolution via product page

Caption: Step-wise chemical progression from initiator formation (Red) to living enolate propagation (Colorless), stabilized by LiCl.

Figure 2: Purification & Reactor Workflow

This diagram details the physical movement of reagents through the vacuum manifold to ensure sterility.

© 2026 BenchChem. All rights reserved.

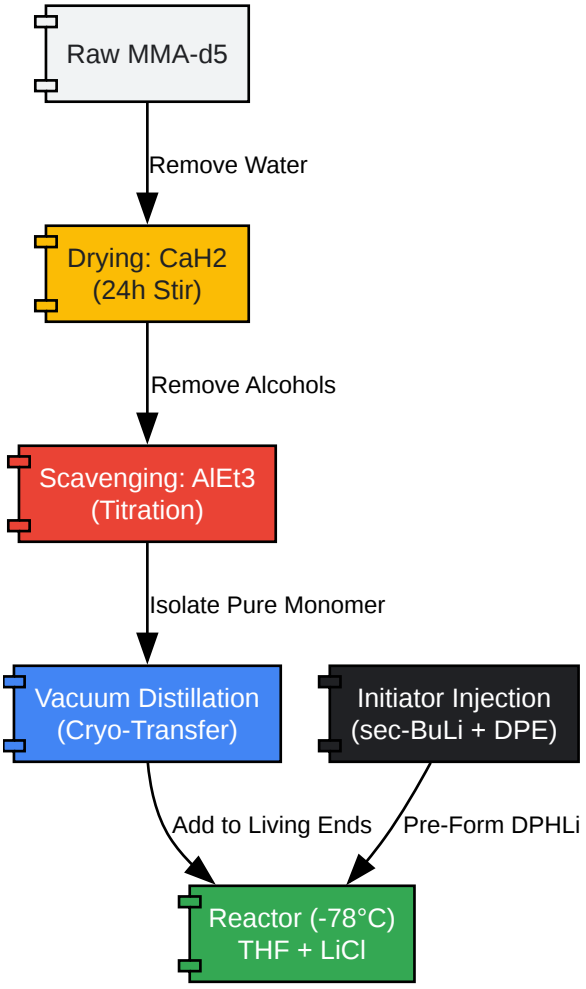

Click to download full resolution via product page

Caption: Critical purification pipeline. The monomer must pass through drying and scavenging steps before entering the reactor.

Part 5: Troubleshooting & Quality Control

© 2026 BenchChem. All rights reserved.

Symptom	Probable Cause	Corrective Action
No color change (Colorless ngcontent-ng-c1989010908="" _nghost-ng-c2127666394="" class="inline ng-star-inserted"> Red)	sec-BuLi is dead or DPE is wet.	Titrate sec-BuLi. Redistill DPE over CaH_2.
Red color fades before MMA addition	System leak or wet solvent.	Check vacuum seals. Re-dry THF over Na/Benzophenone. [1]
Broad PDI (>1.20)	Insufficient LiCl or "Hot" spots.	Increase LiCl ratio. Ensure rapid stirring. Maintain -78°C strictly.
High MW shoulder (GPC)	Oxygen contamination (Coupling).	Degas methanol thoroughly. Check reactor seal.
Low Yield	Termination by impurities.	Improve monomer purification ($AlEt_3$ step is critical).

References

- Teyssié, P., et al. (1990). Ligand-modified anionic polymerization of methacrylates.[1][6][7] Macromolecules.[1][6][7][8][9][10]
- Baskaran, D. (2003). Strategic improvements in the anionic polymerization of methacrylates. Progress in Polymer Science.[7]
- Varshney, S. K., et al. (1992). Anionic polymerization of methacrylates in the presence of lithium chloride.[7][8][11] Macromolecules.[1][6][7][8][9][10]
- Cambridge Isotope Laboratories. (n.d.). Deuterated Monomers Handling Guide.

Need Custom Synthesis?

BenchChem offers custom synthesis for rare earth carbides and specific isotopiclabeling.

Email: info@benchchem.com or Request Quote Online.

Sources

- 1. orbi.uliege.be [orbi.uliege.be]
- 2. nvlpubs.nist.gov [nvlpubs.nist.gov]
- 3. youtube.com [youtube.com]
- 4. US20010046938A1 - Synthesis of dilithium initiator - Google Patents [patents.google.com]
- 5. orbi.umons.ac.be [orbi.umons.ac.be]
- 6. researchgate.net [researchgate.net]
- 7. polymer.chem.cmu.edu [polymer.chem.cmu.edu]
- 8. researchgate.net [researchgate.net]
- 9. researchgate.net [researchgate.net]
- 10. research.aston.ac.uk [research.aston.ac.uk]
- 11. pubs.acs.org [pubs.acs.org]

- To cite this document: BenchChem. [Protocol for anionic polymerization of Methyl methacrylate-d5]. BenchChem, [2026]. [Online PDF]. Available at: [https://www.benchchem.com/product/b1612595/docs#protocol-for-anionic-polymerization-of-methyl-methacrylate-d5]

Disclaimer & Data Validity:

The information provided in this document is for Research Use Only (RUO) and is strictly not intended for diagnostic or therapeutic procedures. While BenchChem strives to provide accurate protocols, we make no warranties, express or implied, regarding the fitness of this product for every specific experimental setup.

Technical Support: The protocols provided are for reference purposes. Unsure if this reagent suits your experiment?

Need Industrial/Bulk Grade? Request Custom Synthesis Quote

© 2026 BenchChem. All rights reserved.

BenchChem

Our mission is to be the trusted global source of essential and advanced chemicals, empowering scientists and researchers to drive progress in science and industry.

Contact

Address: 3281 E Guasti Rd

Ontario, CA 91761, United States

Phone: (601) 213-4426

Email: info@benchchem.com

Contact our Ph.D. Support Team for a compatibility check

© 2026 BenchChem. All rights reserved.