An In-depth Technical Guide to (4-Chlorophenyl)(cyclohexyl)methanone

Author: BenchChem Technical Support Team. **Date**: February 2026

Compound of Interest		
Compound Name:	*4-Chlorophenyl cyclohexyl ketone*	
Cat. No.:	*B1610175*	*Get Quote*

For Researchers, Scientists, and Drug Development Professionals

Foreword

(4-Chlorophenyl)(cyclohexyl)methanone, a seemingly unassuming aromatic ketone, holds a significant position in the landscape of synthetic and medicinal chemistry. Its true value lies not in its direct biological activity, but in its role as a versatile and crucial building block for the synthesis of more complex and pharmacologically active molecules. This guide, intended for the discerning researcher and drug development professional, moves beyond a superficial overview to provide a comprehensive technical understanding of this compound. We will delve into its fundamental properties, explore the nuances of its synthesis, elucidate its applications in medicinal chemistry, and detail the analytical methodologies for its characterization. This document is structured to serve as a practical and authoritative resource, empowering you to leverage the full potential of (4-chlorophenyl)(cyclohexyl)methanone in your research and development endeavors.

Core Chemical Identity and Physicochemical Properties

A foundational understanding of a molecule begins with its unambiguous identification and a grasp of its key physical and chemical characteristics. This section provides the essential identifiers for (4-chlorophenyl)(cyclohexyl)methanone and a summary of its computed physicochemical properties.

© 2025 BenchChem. All rights reserved.

Chemical Identifiers

Precise communication in science hinges on the use of standardized nomenclature and identifiers. The following table summarizes the key identifiers for (4-chlorophenyl)(cyclohexyl)methanone.

Identifier	Value
IUPAC Name	(4-chlorophenyl)(cyclohexyl)methanone
InChIKey	PTYKBHNDBXPYKO-UHFFFAOYSA-N
Canonical SMILES	C1CCC(CC1)C(=O)C2=CC=C(C=C2)Cl
CAS Number	3277-80-3
Molecular Formula	$C_{13}H_{15}ClO$

Physicochemical Data

The physicochemical properties of a compound govern its behavior in both chemical reactions and biological systems. The following table outlines key computed properties of (4-chlorophenyl)(cyclohexyl)methanone.

Property	Value	Source
Molecular Weight	222.71 g/mol	PubChem
XLogP3	4.3	PubChem
Hydrogen Bond Donor Count	0	PubChem
Hydrogen Bond Acceptor Count	1	PubChem
Rotatable Bond Count	2	PubChem
Exact Mass	222.0811428 Da	PubChem
Topological Polar Surface Area	17.1 $Å^2$	PubChem
Heavy Atom Count	15	PubChem

© 2025 BenchChem. All rights reserved.

Synthesis of (4-Chlorophenyl)(cyclohexyl)methanone: A Detailed Protocol

The most prevalent and industrially relevant method for the synthesis of (4-chlorophenyl)(cyclohexyl)methanone is the Friedel-Crafts acylation. This electrophilic aromatic substitution reaction provides a direct and efficient route to this class of ketones.

The Underlying Chemistry: Friedel-Crafts Acylation

Friedel-Crafts acylation involves the reaction of an aromatic compound with an acylating agent, typically an acyl chloride or anhydride, in the presence of a Lewis acid catalyst.[1] In the synthesis of (4-chlorophenyl)(cyclohexyl)methanone, chlorobenzene serves as the aromatic substrate and cyclohexanecarbonyl chloride is the acylating agent. A strong Lewis acid, such as aluminum chloride ($AlCl_3$), is employed as the catalyst.[1]

The mechanism proceeds through the formation of a highly electrophilic acylium ion. The Lewis acid abstracts the chloride from the cyclohexanecarbonyl chloride, generating the acylium ion. This electrophile is then attacked by the electron-rich π-system of the chlorobenzene ring. Due to the ortho, para-directing nature of the chlorine substituent on the benzene ring, the acylation occurs primarily at the para position, with a smaller amount of the ortho isomer being formed.[2][3] A subsequent deprotonation step restores the aromaticity of the ring, yielding the desired ketone and regenerating the catalyst.[1]

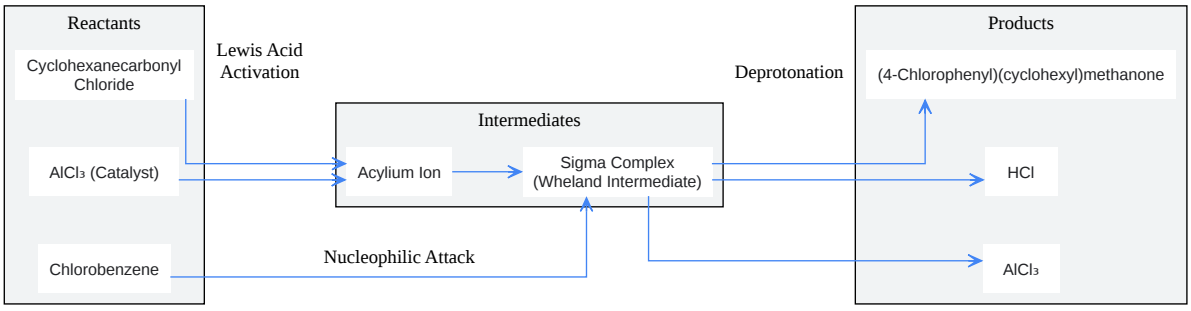

© 2025 BenchChem. All rights reserved.

Click to download full resolution via product page

A simplified workflow of the Friedel-Crafts acylation for the synthesis of (4-chlorophenyl)(cyclohexyl)methanone.

Step-by-Step Experimental Protocol

This protocol provides a detailed procedure for the laboratory-scale synthesis of (4-chlorophenyl)(cyclohexyl)methanone.

Materials and Reagents:

- Chlorobenzene
- Cyclohexanecarbonyl chloride
- Anhydrous aluminum chloride ($AlCl_3$)
- Dichloromethane (anhydrous)
- Hydrochloric acid (concentrated)
- Sodium bicarbonate (saturated solution)
- Anhydrous magnesium sulfate
- Ice

Procedure:

- Reaction Setup: In a three-necked round-bottom flask equipped with a magnetic stirrer, a dropping funnel, and a reflux condenser connected to a gas outlet (to vent HCl gas), add anhydrous aluminum chloride (1.1 eq) and anhydrous dichloromethane. Cool the mixture to 0-5 °C in an ice bath.
- Formation of the Acylium Ion: Slowly add cyclohexanecarbonyl chloride (1.0 eq) to the stirred suspension of aluminum chloride in dichloromethane via the dropping funnel. The addition should be exothermic, and the temperature should be maintained below 10 °C.

© 2025 BenchChem. All rights reserved.

- Acylation: To the resulting mixture, add chlorobenzene (1.2 eq) dropwise, ensuring the temperature remains between 0-5 °C. After the addition is complete, allow the reaction mixture to stir at room temperature for 2-4 hours, or until TLC analysis indicates the consumption of the starting materials.
- Work-up: Carefully quench the reaction by slowly pouring the mixture into a beaker containing crushed ice and concentrated hydrochloric acid. This will decompose the aluminum chloride complex.
- Extraction: Separate the organic layer and extract the aqueous layer with dichloromethane. Combine the organic layers and wash sequentially with water, saturated sodium bicarbonate solution, and brine.
- Drying and Concentration: Dry the organic layer over anhydrous magnesium sulfate, filter, and concentrate the solvent under reduced pressure using a rotary evaporator.
- Purification: The crude product can be purified by column chromatography on silica gel using a suitable eluent system (e.g., a gradient of ethyl acetate in hexanes) to afford pure (4-chlorophenyl)(cyclohexyl)methanone.

Applications in Medicinal Chemistry and Drug Discovery

(4-Chlorophenyl)(cyclohexyl)methanone and its derivatives are valuable intermediates in the synthesis of various biologically active compounds. The cyclohexyl and 4-chlorophenyl moieties can be found in a number of drug candidates and approved drugs, where they contribute to the molecule's overall lipophilicity, metabolic stability, and binding interactions with biological targets.

Precursor to the Antimalarial Drug Atovaquone

One of the most notable applications of a closely related derivative, [4-(4-chlorophenyl)cyclohexyl]methanol, is as a key precursor in the synthesis of the antimalarial drug atovaquone.[4] Atovaquone is a hydroxy-1,4-naphthoquinone that is effective in the treatment of Pneumocystis jirovecii pneumonia and Plasmodium falciparum malaria. The synthesis of atovaquone often involves the coupling of the 4-(4-chlorophenyl)cyclohexyl moiety

© 2025 BenchChem. All rights reserved.

to a naphthoquinone core. The stereochemistry of the cyclohexyl ring, particularly the trans isomer, is often crucial for the biological activity of the final product.[4]

Scaffolds for Novel Antibacterial Agents

Derivatives of 4-(4-chlorophenyl)cyclohexane have been explored for the development of novel antibacterial agents. For instance, hydrazone derivatives synthesized from 4-(4-chlorophenyl)cyclohexane carboxylic acid have shown promising in vitro antibacterial activity against both Gram-positive and Gram-negative bacteria.[5] The 4-chlorophenylcyclohexyl scaffold serves as a lipophilic anchor that can be functionalized to interact with bacterial targets.

Development of Gamma-Secretase Inhibitors for Alzheimer's Disease

The 4-substituted cyclohexyl motif has also been incorporated into the design of gamma-secretase inhibitors, which are being investigated as potential therapeutics for Alzheimer's disease.[6] Gamma-secretase is an enzyme involved in the production of amyloid-beta peptides, which are a hallmark of Alzheimer's pathology.[6] The cyclohexyl group in these inhibitors often occupies a hydrophobic pocket in the enzyme's active site.

Analytical Characterization

The unambiguous characterization of (4-chlorophenyl)(cyclohexyl)methanone is crucial for ensuring its purity and confirming its identity. A combination of spectroscopic and chromatographic techniques is typically employed.

Spectroscopic Methods

- Nuclear Magnetic Resonance (NMR) Spectroscopy: ^{1}H and ^{13}C NMR spectroscopy are indispensable for structural elucidation. The ^{1}H NMR spectrum will show characteristic signals for the aromatic protons of the 4-chlorophenyl group and the aliphatic protons of the cyclohexyl ring. The ^{13}C NMR spectrum will display a distinct signal for the carbonyl carbon.

- Mass Spectrometry (MS): Mass spectrometry provides information about the molecular weight and fragmentation pattern of the molecule. Techniques such as Gas

© 2025 BenchChem. All rights reserved.

Chromatography-Mass Spectrometry (GC-MS) or Liquid Chromatography-Mass Spectrometry (LC-MS) can be used for both identification and quantification.[7]

- Infrared (IR) Spectroscopy: IR spectroscopy is useful for identifying the presence of the carbonyl group, which will exhibit a strong absorption band in the region of 1670-1690 cm^{-1}.

Chromatographic Techniques

- High-Performance Liquid Chromatography (HPLC): HPLC is a powerful technique for assessing the purity of (4-chlorophenyl)(cyclohexyl)methanone and for monitoring the progress of its synthesis. A reversed-phase C18 column with a mobile phase consisting of a mixture of acetonitrile and water is a common setup.[8]

- Gas Chromatography (GC): Due to its volatility, (4-chlorophenyl)(cyclohexyl)methanone can also be analyzed by GC, often coupled with a flame ionization detector (FID) or a mass spectrometer (MS).[9]

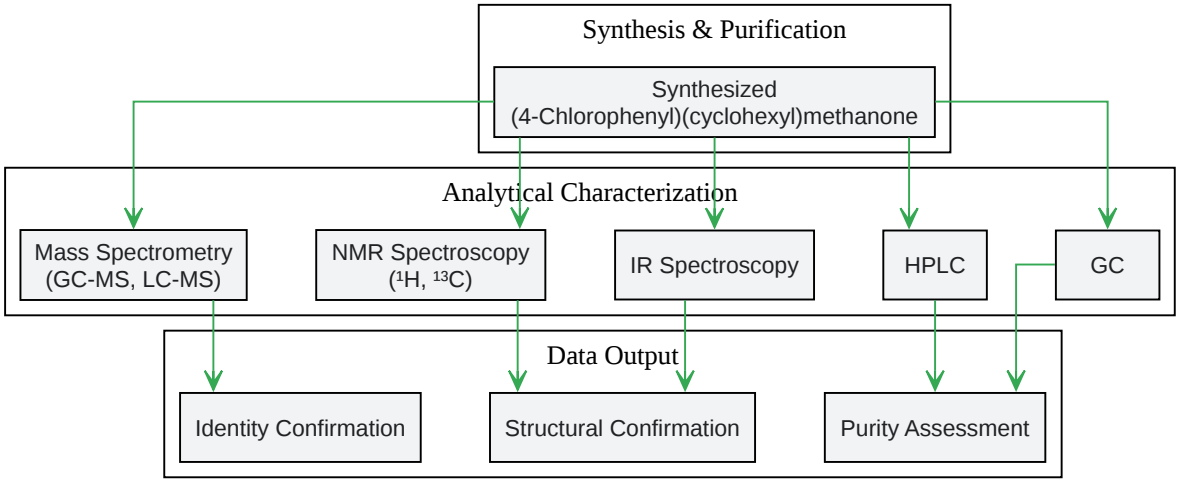

Click to download full resolution via product page

A typical analytical workflow for the characterization of (4-chlorophenyl)(cyclohexyl)methanone.

Safety and Handling

© 2025 BenchChem. All rights reserved.

(4-Chlorophenyl)(cyclohexyl)methanone should be handled in a well-ventilated fume hood. Appropriate personal protective equipment (PPE), including safety glasses, gloves, and a lab coat, should be worn. For detailed safety information, refer to the Material Safety Data Sheet (MSDS) provided by the supplier.

Conclusion

(4-Chlorophenyl)(cyclohexyl)methanone is a valuable and versatile intermediate in organic synthesis, with significant applications in the development of pharmaceuticals. Its straightforward synthesis via Friedel-Crafts acylation, coupled with its utility as a scaffold for a range of biologically active molecules, ensures its continued importance in the fields of medicinal chemistry and drug discovery. A thorough understanding of its synthesis, properties, and analytical characterization, as detailed in this guide, is essential for researchers and scientists seeking to harness its full potential.

References

- PubChem. (4-chlorophenyl)-cyclohexylmethanone. National Center for Biotechnology Information. Retrieved from [Link]
- Clark, J. (2023). Friedel-Crafts Acylation of Benzene. Chemguide. Retrieved from [Link]
- Google Patents. (2011). CN101973872A - Synthetic process of 4-(4-chlorophenyl) cyclohexane-1-methanoic acid.
- Eppakayala, L., & et al. (2015). Synthesis and Biological Evaluation of 4-(4-Chlorophenyl)cyclohexane Carbohydrazide Derivatives as Anti-Bacterial Agents. Asian Journal of Chemistry, 27(11), 4051-4055.
- Churcher, I., & et al. (2006). 4-substituted cyclohexyl sulfones as potent, orally active gamma-secretase inhibitors. Bioorganic & Medicinal Chemistry Letters, 16(2), 280-284.
- Friedel-Crafts Acylation of Chlorobenzene | 2-Chloro acetophenone. (2023, March 26). [Video]. YouTube. Retrieved from [Link]
- Alpha Chemical Corp. (2023, May 19). Revealing Cyclohexanone: Properties, Uses, and Benefits. Retrieved from [Link]
- Organic Syntheses. (n.d.). Acetoacetonitrile, 2-(p-chlorophenyl)-4-phenyl. Retrieved from [Link]

© 2025 BenchChem. All rights reserved.

- Pang, X., & et al. (2024). Analytical Methods for Atmospheric Carbonyl Compounds: A Review. Molecules, 29(1), 123.
- PubChem. 4-Chlorophenyl cyclopropyl ketone. National Center for Biotechnology Information. Retrieved from [Link]
- Ho, S. S. H., & et al. (2014). Biases in ketone measurements using DNPH-coated solid sorbent cartridges. Analytical Methods, 6(4), 967-974.
- Pathak, A., & et al. (2023). A progressive review on the synthesis of Atovaquone (an anti-malarial drug), empowered by the critical examination of prior art. Results in Chemistry, 5, 100898.
- Li, Z., & et al. (2017). Colorimetric Recognition of Aldehydes and Ketones.
- Vedantu. (n.d.). On reaction of chlorobenzene with acetyl chloride in class 12 chemistry CBSE. Retrieved from [Link]
- PubChem. Cyclohexyl phenyl ketone. National Center for Biotechnology Information. Retrieved from [Link]
- Pico, Y. (Ed.). (2020). Analytical methods for the quantification of volatile aromatic compounds. In Comprehensive Analytical Chemistry (Vol. 91, pp. 1-26). Elsevier.
- da Silva, J. A. G., & et al. (2020). Chemical Characterization Using Different Analytical Techniques to Understand Processes: The Case of the Paraffinic Base Oil Production Line. Processes, 8(11), 1469.
- University of Hertfordshire. (n.d.). Cyclohexanone. Agriculture and Environment Research Unit (AERU). Retrieved from [Link]
- Google Patents. (1990). US4895984A - Acylation of aromatics.

Need Custom Synthesis?

BenchChem offers custom synthesis for rare earth carbides and specific isotopiclabeling.

Email: info@benchchem.com or Request Quote Online.

Sources

- 1. pdf.benchchem.com [pdf.benchchem.com]

- 2. youtube.com [youtube.com]
- 3. On reaction of chlorobenzene with acetyl chloride in class 12 chemistry CBSE [vedantu.com]
- 4. benchchem.com [benchchem.com]
- 5. researchgate.net [researchgate.net]
- 6. 4-substituted cyclohexyl sulfones as potent, orally active gamma-secretase inhibitors - PubMed [pubmed.ncbi.nlm.nih.gov]
- 7. mdpi.com [mdpi.com]
- 8. mdpi.com [mdpi.com]
- 9. researchgate.net [researchgate.net]

- To cite this document: BenchChem. [An In-depth Technical Guide to (4-Chlorophenyl)(cyclohexyl)methanone]. BenchChem, [2026]. [Online PDF]. Available at: [https://www.benchchem.com/product/b1610175#inchi-key-for-4-chlorophenyl-cyclohexyl-ketone]

Disclaimer & Data Validity:

The information provided in this document is for Research Use Only (RUO) and is strictly not intended for diagnostic or therapeutic procedures. While BenchChem strives to provide accurate protocols, we make no warranties, express or implied, regarding the fitness of this product for every specific experimental setup.

Technical Support: The protocols provided are for reference purposes. Unsure if this reagent suits your experiment? [Contact our Ph.D. Support Team for a compatibility check]

Need Industrial/Bulk Grade? Request Custom Synthesis Quote

BenchChem

Our mission is to be the trusted global source of essential and advanced chemicals, empowering scientists and researchers to drive progress in science and industry.

Contact

Address: 3281 E Guasti Rd

Ontario, CA 91761, United States

Phone: (601) 213-4426

Email: info@benchchem.com

© 2025 BenchChem. All rights reserved.

© 2025 BenchChem. All rights reserved.