Methodology for Assessing Acetylcholine Release Enhancers: An Application and Protocol Guide

Author: BenchChem Technical Support Team. **Date**: May 2026

Compound of Interest

Compound Name:	*3-(pyridin-3-ylmethyl)-1H-indole*
CAS No.:	*5275-04-7*
Cat. No.:	*B1606934*

Get Quote

Abstract

Acetylcholine (ACh) is a critical neurotransmitter that governs a vast array of physiological processes, from muscle contraction and autonomic function to higher-order cognitive operations like learning and memory.[1][2] Dysregulation of cholinergic signaling is a hallmark of several debilitating neurodegenerative and psychiatric disorders, including Alzheimer's disease and certain forms of dementia.[1][3][4] Consequently, the development of therapeutic agents that can enhance acetylcholine release represents a significant area of focus in modern drug discovery.[5][6][7] This comprehensive guide provides researchers, scientists, and drug development professionals with a detailed overview and step-by-step protocols for the principal methodologies used to assess and validate compounds that enhance acetylcholine release. We will delve into the mechanistic underpinnings of in vitro, ex vivo, and in vivo techniques, offering field-proven insights to ensure robust and reproducible data generation.

© 2026 BenchChem. All rights reserved.

Introduction: The Significance of Cholinergic Neuromodulation

The cholinergic system, with its widespread projections throughout the central and peripheral nervous systems, is integral to maintaining physiological homeostasis and cognitive function.[2] Acetylcholine's actions are mediated through two major classes of receptors: nicotinic (nAChRs), which are ligand-gated ion channels, and muscarinic (mAChRs), which are G-protein coupled receptors.[2] The precise regulation of ACh synthesis, packaging, release, and degradation is paramount for normal synaptic transmission.

Enhancing acetylcholine release is a key therapeutic strategy for conditions characterized by cholinergic deficits.[5][8] This can be achieved through various mechanisms, including but not limited to:

- Increasing precursor availability: Supplying choline, the essential precursor for ACh synthesis.[9][10]
- Modulating presynaptic autoreceptors: Antagonizing inhibitory M2/M4 muscarinic autoreceptors that provide negative feedback on ACh release.[6]
- Enhancing the release machinery: Directly or indirectly acting on the cellular components responsible for vesicular fusion and exocytosis.
- Inhibition of acetylcholinesterase (AChE): Preventing the breakdown of ACh in the synaptic cleft, thereby prolonging its action.[5]

The selection of an appropriate assay to screen for and characterize acetylcholine release enhancers is contingent on the specific research question, the desired throughput, and the stage of the drug discovery pipeline.

Foundational Concepts in Acetylcholine Dynamics

A thorough understanding of the acetylcholine lifecycle is crucial for designing and interpreting experiments aimed at modulating its release.

© 2026 BenchChem. All rights reserved.

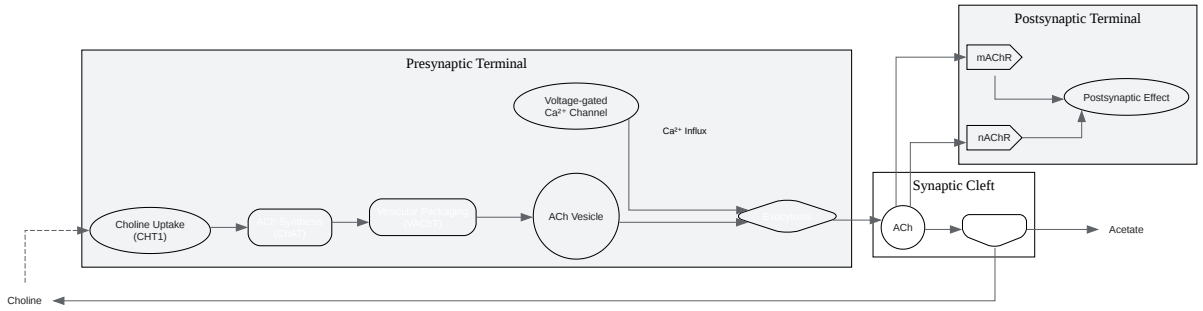

Click to download full resolution via product page

Caption: The Acetylcholine Lifecycle in the Synapse.

In Vitro Methodologies: Cellular and Subcellular Approaches

In vitro assays are indispensable for initial screening and mechanistic studies due to their high throughput, controlled environment, and cost-effectiveness.

Cell-Based Assays for Acetylcholine Release

Cultured cell lines that exhibit a cholinergic phenotype are valuable tools for assessing the effects of compounds on acetylcholine release.[11][12][13]

Recommended Cell Lines:

© 2026 BenchChem. All rights reserved.

- LA-N-2: A human neuroblastoma cell line that expresses choline transporter, choline acetyltransferase (ChAT), muscarinic receptors, and acetylcholinesterase.[11][12]
- SH-SY5Y (differentiated): Another human neuroblastoma cell line that, upon differentiation, develops a more mature neuronal phenotype and can be used to study cholinergic signaling.[14]
- PC12 (differentiated): A rat pheochromocytoma cell line that can be differentiated with nerve growth factor to exhibit a neuronal-like phenotype and release dopamine in response to nicotinic receptor activation.[15] While not directly measuring ACh release, it can be a surrogate for assessing nAChR agonist activity.

This protocol is adapted from Tanaka-Kanegae & Hamada (2021) and allows for the simultaneous measurement of both intracellular and extracellular ACh levels, providing a more comprehensive understanding of a compound's effect.[11][12][13][16]

Objective: To quantify the effect of a test compound on acetylcholine levels in a human cholinergic cell line.

Materials:

- LA-N-2 cells
- Cell culture medium (e.g., DMEM/F12) with and without choline chloride
- Fetal Bovine Serum (FBS)
- Penicillin-Streptomycin
- Test compound(s)
- Physostigmine (AChE inhibitor)
- Lysis buffer
- Phosphate Buffered Saline (PBS)
- Acetylcholine and Choline standards

© 2026 BenchChem. All rights reserved.

- Quantification method: High-Performance Liquid Chromatography with Electrochemical Detection (HPLC-ECD) or a commercial fluorescence-based assay kit.

Procedure:

- Cell Culture: Culture LA-N-2 cells in complete medium until they reach sub-confluence.
- Assay Preparation:
  - Seed 4.0 x 10^6 LA-N-2 cells into 60 mm dishes and culture until sub-confluent.[12]
  - Five hours before the assay, replace the culture medium with an assay medium lacking choline chloride and containing a low percentage of FBS (e.g., 2%).[11] This step is crucial to reduce background choline levels.
- Compound Treatment:
  - Prepare dilutions of your test compound(s) in the assay medium.
  - Add the test compound(s) to the cells. Include a vehicle control group.
  - For some experiments, co-incubation with an AChE inhibitor like physostigmine may be necessary to prevent ACh degradation and allow for detectable levels in the extracellular medium.[11]
  - Incubate for the desired time period (e.g., 1-24 hours).
- Sample Collection:
  - Extracellular Fraction: Carefully collect the culture medium. Centrifuge to remove any detached cells and store the supernatant at -80°C.
  - Intracellular Fraction: Wash the cells twice with ice-cold PBS. Add lysis buffer, scrape the cells, and collect the lysate. Sonicate the lysate and centrifuge to pellet cellular debris. Collect the supernatant and store at -80°C.[12]
- Acetylcholine Quantification:

© 2026 BenchChem. All rights reserved.

- Quantify the concentration of acetylcholine and choline in both the extracellular and intracellular fractions using a sensitive analytical method. HPLC-ECD is a highly specific and sensitive method for this purpose.[17][18][19] Alternatively, commercially available fluorescence-based assay kits can be used.[20][21][22]

Data Analysis and Interpretation:

- Construct standard curves for acetylcholine and choline.
- Calculate the concentration of ACh and choline in each sample.
- Compare the ACh levels in the compound-treated groups to the vehicle control group. An increase in intracellular and/or extracellular ACh suggests the compound may be an ACh release enhancer.

Causality and Self-Validation:

- The inclusion of both intracellular and extracellular measurements provides a more complete picture. For example, a compound that enhances ACh synthesis may lead to an increase in intracellular ACh, which may or may not be accompanied by a proportional increase in basal release.
- Running parallel experiments with and without an AChE inhibitor can help to dissect the mechanism of action.

Amperometric and Biosensor-Based Approaches

Recent advances in biosensor technology have enabled the real-time detection of acetylcholine release from cultured cells with high temporal and spatial resolution.[14][23][24]

Principle: These biosensors typically consist of an electrode coated with acetylcholinesterase and choline oxidase.[24] When acetylcholine is released, it is hydrolyzed by AChE to choline. Choline is then oxidized by choline oxidase, producing hydrogen peroxide, which is detected electrochemically.[24]

© 2026 BenchChem. All rights reserved.

Feature	Description
High Temporal Resolution	Capable of detecting release events on a sub-second timescale.[25][26][27]
High Spatial Resolution	Nanotip biosensors can be positioned near specific release sites on a neuron.[14]
Real-time Measurement	Allows for the dynamic monitoring of ACh release in response to stimuli.
High Sensitivity	Can detect low nanomolar to micromolar concentrations of acetylcholine.[23]

Application: These biosensors are particularly useful for studying the kinetics of exocytosis and the effects of compounds on stimulus-evoked acetylcholine release.[14]

Ex Vivo Methodologies: Brain Slices and Synaptosomes

Ex vivo preparations, such as brain slices and synaptosomes, offer a more physiologically relevant context than cultured cells while still allowing for a high degree of experimental control.

Acetylcholine Release from Brain Slices

Brain slices preserve the local microcircuitry of a specific brain region, making them an excellent model for studying the modulation of synaptic transmission.

Objective: To measure the effect of a test compound on depolarization-induced acetylcholine release from a specific brain region (e.g., hippocampus or striatum).

Materials:

- Rodent (rat or mouse)
- Vibratome
- Artificial cerebrospinal fluid (aCSF), oxygenated with 95% O2 / 5% CO2

© 2026 BenchChem. All rights reserved.

- Perfusion system
- Bipolar stimulating electrode
- Test compound(s)
- AChE inhibitor (e.g., neostigmine)
- Sample collection system
- HPLC-ECD system for ACh quantification

Procedure:

- Brain Slice Preparation:
  - Anesthetize and decapitate the rodent.
  - Rapidly remove the brain and place it in ice-cold, oxygenated aCSF.
  - Prepare coronal or sagittal slices (e.g., 300-400 µm thick) of the desired brain region using a vibratome.
  - Allow the slices to recover in oxygenated aCSF at room temperature for at least 1 hour.
- Perfusion and Stimulation:
  - Transfer a slice to a recording chamber and continuously perfuse with oxygenated aCSF at a constant flow rate.
  - Place a bipolar stimulating electrode in the appropriate location to activate cholinergic afferents.
  - Collect baseline perfusate samples.
  - Apply electrical stimulation (e.g., pulses of a specific frequency and duration) to evoke acetylcholine release. Collect the perfusate during and after stimulation.
- Compound Application:

© 2026 BenchChem. All rights reserved.

- Add the test compound to the perfusion medium and allow it to equilibrate with the slice.
- Repeat the electrical stimulation protocol in the presence of the compound and collect the perfusate.

- Sample Analysis:
  - Add an AChE inhibitor to the collected samples to prevent degradation.
  - Quantify the acetylcholine concentration in the perfusate samples using HPLC-ECD.[17] [19]

Data Analysis and Interpretation:

- Calculate the amount of acetylcholine released during the stimulation periods (S1 and S2).
- Express the effect of the compound as the S2/S1 ratio and compare it to the ratio obtained in the absence of the compound.
- An S2/S1 ratio significantly greater than 1 in the presence of the test compound indicates an enhancement of evoked acetylcholine release.

© 2026 BenchChem. All rights reserved.

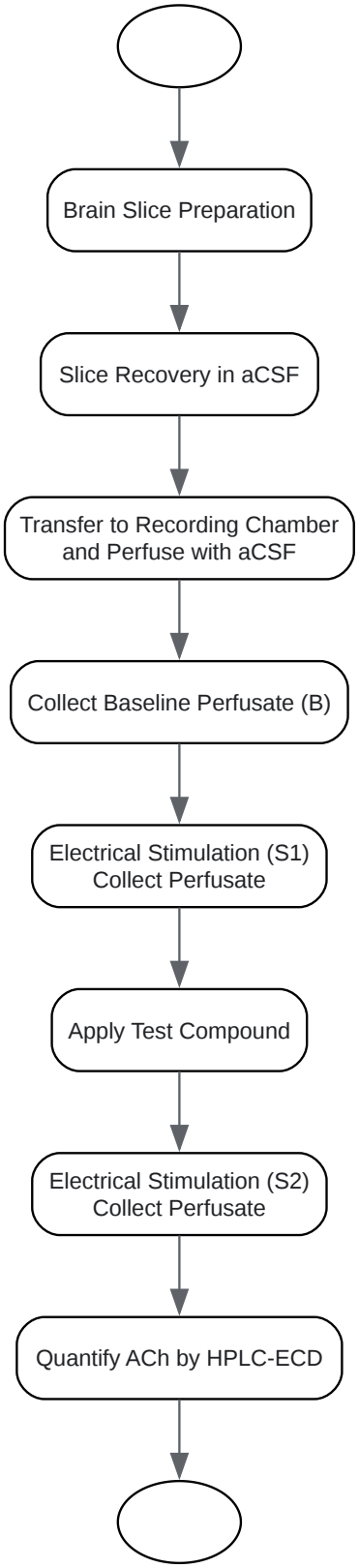

Click to download full resolution via product page

Caption: Workflow for Brain Slice Perfusion Experiment.

© 2026 BenchChem. All rights reserved.

In Vivo Methodologies: Microdialysis

In vivo microdialysis is the gold standard for measuring neurotransmitter levels in the brains of freely moving animals, providing the most physiologically relevant data.[28][29]

Principles of In Vivo Microdialysis

A microdialysis probe, which consists of a semi-permeable membrane, is stereotaxically implanted into a specific brain region of an anesthetized or awake animal.[29] The probe is then perfused with a physiological solution (dialysate). Small molecules, including neurotransmitters, diffuse across the membrane from the extracellular fluid into the dialysate, which is then collected for analysis.[29]

Objective: To assess the effect of a systemically or locally administered compound on extracellular acetylcholine levels in a specific brain region of a freely moving rodent.

Materials:

- Rodent (rat or mouse)
- Stereotaxic apparatus
- Microdialysis probe
- Perfusion pump
- Fraction collector
- Test compound(s)
- Artificial cerebrospinal fluid (aCSF) containing an AChE inhibitor (e.g., neostigmine).[30]
- HPLC-ECD system

Procedure:

- Surgical Implantation of Microdialysis Probe:
  - Anesthetize the animal and place it in a stereotaxic frame.

© 2026 BenchChem. All rights reserved.

- Implant a guide cannula targeted to the brain region of interest.
- Allow the animal to recover from surgery for several days.

- Microdialysis Experiment:
  - On the day of the experiment, insert the microdialysis probe through the guide cannula.
  - Connect the probe to a perfusion pump and a fraction collector.
  - Perfuse the probe with aCSF containing an AChE inhibitor at a low, constant flow rate (e.g., 1-2 µL/min).[30] The inclusion of an AChE inhibitor is critical for detecting basal levels of ACh.[30]
  - Allow the system to stabilize and collect baseline dialysate samples.
- Compound Administration:
  - Administer the test compound systemically (e.g., via intraperitoneal injection) or locally through the microdialysis probe.
  - Continue to collect dialysate fractions at regular intervals (e.g., every 20 minutes).[30]
- Sample Analysis:
  - Quantify the acetylcholine concentration in the dialysate samples using a highly sensitive HPLC-ECD method.[17][18][19]

Data Analysis and Interpretation:

- Calculate the average baseline acetylcholine concentration.
- Express the post-administration ACh levels as a percentage of the baseline.
- A sustained increase in extracellular acetylcholine levels following compound administration indicates an enhancement of in vivo release.

Trustworthiness and Self-Validation:

© 2026 BenchChem. All rights reserved.

- At the end of the experiment, perfusing the probe with a high-potassium aCSF or a sodium channel blocker (like tetrodotoxin) can be used to confirm that the measured acetylcholine is of neuronal origin and its release is action potential-dependent.[31]
- Proper probe placement should be histologically verified post-experiment.

Emerging Technologies: Genetically Encoded ACh Sensors

A recent and exciting development is the creation of genetically encoded fluorescent sensors for acetylcholine, such as GRABACh.[25][26] These sensors can be expressed in specific neuronal populations, allowing for the visualization of acetylcholine dynamics with unprecedented cellular and temporal resolution in vivo.[25][26][32][33]

Principle: These sensors are typically based on a G-protein coupled receptor (like the M3 muscarinic receptor) linked to a fluorescent protein.[25] Binding of acetylcholine induces a conformational change that alters the fluorescence intensity, which can be detected using techniques like fiber photometry or two-photon microscopy.[25][26]

Advantages:

- Cell-type specificity: Can be targeted to specific neuronal populations.
- High temporal resolution: Can detect rapid, transient changes in ACh release.[25][26]
- Chronic imaging: Allows for longitudinal studies of acetylcholine dynamics in the same animal over time.

Summary and Comparative Analysis of Methodologies

The choice of methodology for assessing acetylcholine release enhancers depends on the specific goals of the study.

© 2026 BenchChem. All rights reserved.

Methodology	Advantages	Disadvantages	Primary Application
Cell-Based Assays	High throughput, low cost, mechanistic insights.	Low physiological relevance, potential for cell line-specific artifacts.	High-throughput screening, initial mechanism of action studies.
Brain Slice Preparations	Preserves local circuitry, good experimental control.	Axons from distant inputs are severed, limited throughput.	Characterization of compound effects on synaptic transmission.
In Vivo Microdialysis	High physiological relevance, use in freely moving animals.	Low temporal resolution, invasive.	Preclinical validation of drug candidates, pharmacokinetic/pharmacodynamic studies.
Genetically Encoded Sensors	High temporal and cellular resolution, chronic imaging.	Requires genetic manipulation, complex data analysis.	Investigating the role of specific cholinergic circuits in behavior.

Conclusion

The methodologies outlined in this guide provide a robust toolkit for the identification and characterization of compounds that enhance acetylcholine release. A multi-tiered approach, beginning with high-throughput in vitro screens and progressing to more physiologically relevant ex vivo and in vivo models, is essential for a successful drug discovery campaign targeting the cholinergic system. The continued development of novel technologies, such as genetically encoded biosensors, promises to further illuminate the complex dynamics of cholinergic neurotransmission and aid in the development of novel therapeutics for a range of neurological and psychiatric disorders.

References

- Potter, P. E., Meek, J. L., & Neff, N. H. (1983). Acetylcholine and choline in neuronal tissue measured by HPLC with electrochemical detection. Journal of Neurochemistry, 41(1), 188–194.
- Michell, A. J. (2009). Regulation of cortical acetylcholine release: insights from in vivo microdialysis studies. Journal of Neuroscience Research, 87(1), 1-12.

© 2026 BenchChem. All rights reserved.

- Duan, W. Z., Qu, Z. W., & Zhang, J. T. (1997). [Determination of acetylcholine by high performance liquid chromatography, enzyme-loaded postcolumn, and electrochemical detector]. Yao Xue Xue Bao, 32(12), 920-923.
- Tata, A. M., Velluto, L., D'Angelo, C., & Reale, M. (2014). Cholinergic System Dysfunction and Neurodegenerative Diseases: Cause or Effect?. Current Neuropharmacology, 12(5), 441–455.
- Wess, J. (2004). In vivo release of non-neuronal acetylcholine from the human skin as measured by dermal microdialysis: effect of botulinum toxin. British Journal of Pharmacology, 142(2), 284-290.
- Potter, P. E., Meek, J. L., & Neff, N. H. (1983). Acetylcholine and choline in neuronal tissue measured by HPLC with electrochemical detection. Journal of Neurochemistry, 41(1), 188-194.
- Jing, M., Zhang, P., Wang, G., Feng, J., Mesik, L., Zeng, J., ... & Li, Y. (2020). An optimized acetylcholine sensor for monitoring in vivo cholinergic activity.
- Jing, M., Zhang, P., Wang, G., Feng, J., Mesik, L., Zeng, J., ... & Li, Y. (2020). An optimized acetylcholine sensor for monitoring in vivo cholinergic activity.
- Invitrogen™ Amplex™ Acetylcholine/Acetlycholinesterase Assay Kit. Fisher Scientific.
- Smith, L. A., & Johnson, D. A. (2004). A fluorescence assay for measuring acetylcholinesterase activity in rat blood and a human neuroblastoma cell line (SH-SY5Y). Analytical biochemistry, 333(2), 291-297.
- Thermo Fisher, A12217, Amplex™ Acetylcholine/Acetlycholinesterase Assay Kit. Iright.
- Anand, P., & Singh, B. (2013). Role of Cholinergic Signaling in Alzheimer's Disease. Current Alzheimer Research, 10(3), 257-265.
- Tata, A. M., Velluto, L., D'Angelo, C., & Reale, M. (2014). Cholinergic system dysfunction and neurodegenerative diseases: cause or effect?. CNS & Neurological Disorders-Drug Targets (Formerly Current Drug Targets-CNS & Neurological Disorders), 13(6), 1047-1058.
- Williams, J. A., Comisarow, J., Day, J., Fibiger, H. C., & Reiner, P. B. (1994). State-Dependent Release of Acetylcholine in Rat Thalamus Measured by in vivo Microdialysis. Journal of Neuroscience, 14(9), 5236-5242.
- Terry, A. V., & Buccafusco, J. J. (2003). The cholinergic hypothesis of age and Alzheimer's disease-related cognitive deficits: recent challenges and their implications for novel drug development. Journal of pharmacology and experimental therapeutics, 306(3), 821-827.
- Koyama, Y., & Baba, A. (1993). Effects of choline administration on in vivo release and biosynthesis of acetylcholine in the rat striatum as studied by in vivo brain microdialysis. Neurochemical research, 18(11), 1187-1192.
- Anand, P., & Singh, B. (2013). Acetylcholinesterase Inhibitors in the Treatment of Neurodegenerative Diseases and the Role of Acetylcholinesterase in their Pathogenesis. Current drug targets, 14(4), 387-400.

© 2026 BenchChem. All rights reserved.

- Di Chiara, G. (2002). In vivo brain microdialysis: advances in neuropsychopharmacology and drug discovery. Trends in pharmacological sciences, 23(11), 519-524.
- Duan, W. Z., Qu, Z. W., & Zhang, J. T. (1997). Determination of acetylcholine by high performance liquid chromatography, enzyme-loaded postcolumn, and electrochemical detector. Yao xue xue bao= Acta pharmaceutica Sinica, 32(12), 920-923.
- Potter, P. E., Meek, J. L., & Neff, N. H. (1983). Acetylcholine and Choline in Neuronal Tissue Measured by HPLC with Electrochemical Detection. Semantic Scholar.
- Tanaka-Kanegae, R., & Hamada, K. (2021). A novel in vitro assay model developed to measure both extracellular and intracellular acetylcholine levels for screening cholinergic agents. PloS one, 16(10), e0258279.
- Clader, J. W. (1999). Recent advances in cholinergic drugs for Alzheimer's disease. Current opinion in drug discovery & development, 2(4), 311-320.
- Li, X., Wu, Y., Wang, Y., Li, Y., & Wang, P. (2023). Nanotip Acetylcholine Biosensor Reveals Cholinergic Differentiated SH-SY5Y Cells Release Partial Vesicle Content During Exocytosis. ChemRxiv.
- Tanaka-Kanegae, R., & Hamada, K. (2021). A schematic diagram of the new in vitro assay system The procedures to measure extracellular and intracellular acetylcholine levels are illustrated.
- Tanaka-Kanegae, R., & Hamada, K. (2021). A novel in vitro assay model developed to measure both extracellular and intracellular acetylcholine levels for screening cholinergic agents. PLOS ONE, 16(10), e0258279.
- Tanaka-Kanegae, R., & Hamada, K. (2021). A novel in vitro assay model developed to measure both extracellular and intracellular acetylcholine levels for screening cholinergic agents. PLOS ONE, 16(10), e0258279.
- Pohanka, M. (2012). Acetylcholinesterase inhibitors: a patent review (2008-present).
- Tanaka-Kanegae, R., & Hamada, K. (2021). A schematic diagram of the new in vitro assay system The procedures to measure extracellular and intracellular acetylcholine levels are illustrated.
- Tanaka-Kanegae, R., & Hamada, K. (2021). A novel in vitro assay model developed to measure both extracellular and intracellular acetylcholine levels for screening cholinergic agents. PLOS ONE, 16(10), e0258279.
- (A) Amplex Red and (B) Ellman cell-based assay schemes for measuring...
- Amplex Acetylcholine/Acetlycholinesterase Assay Kit. 캐시|바이|.
- Lau, J. K., Brown, K. C., Dom, A. M., & Wurtzel, E. T. (2014). Measurement of Acetylcholine from Cell Lines. Bio-protocol, 4(13), e1167.
- Kumar, A., Singh, S., & Kumar, A. (2023). An Amperometric Acetylcholine Biosensor Based on Co-Immobilization of Enzyme Nanoparticles onto Nanocomposite. Micromachines, 14(3), 643.

© 2026 BenchChem. All rights reserved.

- Wang, Y., Li, X., Wu, Y., Li, Y., & Wang, P. (2022). Imaging in vivo acetylcholine release in the peripheral nervous system with a fluorescent nanosensor. Proceedings of the National Academy of Sciences, 119(15), e2118769119.
- Atcherley, C. W., Robbins, E. M., & Hashemi, P. (2023). Ex Vivo Electrochemical Monitoring of Cholinergic Signaling in the Mouse Colon Using an Enzyme-Based Biosensor. ACS chemical neuroscience.
- Minarini, A., Bolognesi, M. L., & Melchiorre, C. (2011). New advances in pharmacological approaches to the cholinergic system: an overview on muscarinic receptor ligands and cholinesterase inhibitors. Current medicinal chemistry, 18(34), 5292-5312.
- Acetylcholine Assay Kit (Colorimetric). Cell Biolabs, Inc.
- Tucek, S. (1999). HPLC/EC Detection and Quantification of Acetylcholine in Dialysates. In: Neurotransmitter Methods (pp. 165-176). Humana Press.
- Application Notes and Protocols: Utilizing Choline Lactate to Investigate Acetylcholine Release Mechanisms. Benchchem.
- Cognitive Enhancers: Cholinesterase Inhibitors and NMDA Receptor Antagonists. JoVE.
- Maelicke, A., Samochocki, M., Jostock, R., Fehrenbacher, A., Ludwig, J., Albuquerque, E. X., & Zerlin, M. (2001). Allosteric modulation of nicotinic acetylcholine receptors as a treatment strategy for Alzheimer's disease. Behavioural brain research, 125(1-2), 199-206.
- Sarter, M., & Lustig, C. (2020). How can I measure brain acetylcholine levels in vivo? Advantages and caveats of commonly used approaches. Journal of Neuroscience Methods, 337, 108664.
- Wang, Y., Li, X., Wu, Y., Li, Y., & Wang, P. (2022). Imaging in vivo acetylcholine release in the peripheral nervous system with a fluorescent nanosensor.
- Shinohara, H., Inagaki, S., & Koyama, S. (2019). Qualitative Assay to Detect Dopamine Release by Ligand Action on Nicotinic Acetylcholine Receptors. Methods and protocols, 2(4), 93.
- Sarter, M., & Lustig, C. (2020). How can I measure brain acetylcholine levels in vivo? Advantages and caveats of commonly used approaches.
- Parikh, V., & Sarter, M. (2006). Second-by-second measurement of acetylcholine release in prefrontal cortex. European Journal of Neuroscience, 24(5), 1439-1449.

Need Custom Synthesis?

BenchChem offers custom synthesis for rare earth carbides and specific isotopiclabeling.

Email: info@benchchem.com or Request Quote Online.

Sources

- 1. researchgate.net [researchgate.net]
- 2. tandfonline.com [tandfonline.com]
- 3. Role of Cholinergic Signaling in Alzheimer’s Disease - PMC [pmc.ncbi.nlm.nih.gov]
- 4. Cholinergic system dysfunction and neurodegenerative diseases: cause or effect? - PubMed [pubmed.ncbi.nlm.nih.gov]
- 5. mdpi.com [mdpi.com]
- 6. Recent advances in cholinergic drugs for Alzheimer's disease - PubMed [pubmed.ncbi.nlm.nih.gov]
- 7. mdpi.com [mdpi.com]
- 8. Video: Cognitive Enhancers: Cholinesterase Inhibitors and NMDA Receptor Antagonists [jove.com]
- 9. Effects of choline administration on in vivo release and biosynthesis of acetylcholine in the rat striatum as studied by in vivo brain microdialysis - PubMed [pubmed.ncbi.nlm.nih.gov]
- 10. pdf.benchchem.com [pdf.benchchem.com]
- 11. A novel in vitro assay model developed to measure both extracellular and intracellular acetylcholine levels for screening cholinergic agents - PMC [pmc.ncbi.nlm.nih.gov]
- 12. journals.plos.org [journals.plos.org]
- 13. A novel in vitro assay model developed to measure both extracellular and intracellular acetylcholine levels for screening cholinergic agents | PLOS One [journals.plos.org]
- 14. chemrxiv.org [chemrxiv.org]
- 15. mdpi.com [mdpi.com]
- 16. researchgate.net [researchgate.net]
- 17. Measurement of acetylcholine and choline in brain by HPLC with electrochemical detection - PubMed [pubmed.ncbi.nlm.nih.gov]
- 18. [Determination of acetylcholine by high performance liquid chromatography, enzyme-loaded postcolumn, and electrochemical detector] - PubMed [pubmed.ncbi.nlm.nih.gov]
- 19. Acetylcholine and choline in neuronal tissue measured by HPLC with electrochemical detection - PubMed [pubmed.ncbi.nlm.nih.gov]
- 20. Invitrogen Amplex Acetylcholine/Acetlycholinesterase Assay Kit 500 Assays | Buy Online | Invitrogen™ | Fisher Scientific [fishersci.com]

© 2026 BenchChem. All rights reserved.

- 21. iright.com [iright.com]
- 22. cacheby.com [cacheby.com]
- 23. mdpi.com [mdpi.com]
- 24. Ex Vivo Electrochemical Monitoring of Cholinergic Signaling in the Mouse Colon Using an Enzyme-Based Biosensor - PubMed [pubmed.ncbi.nlm.nih.gov]
- 25. An optimized acetylcholine sensor for monitoring in vivo cholinergic activity - PMC [pmc.ncbi.nlm.nih.gov]
- 26. An optimized acetylcholine sensor for monitoring in vivo cholinergic activity | Springer Nature Experiments [experiments.springernature.com]
- 27. Second-by-second measurement of acetylcholine release in prefrontal cortex - PubMed [pubmed.ncbi.nlm.nih.gov]
- 28. Regulation of cortical acetylcholine release: insights from in vivo microdialysis studies - PMC [pmc.ncbi.nlm.nih.gov]
- 29. In vivo brain microdialysis: advances in neuropsychopharmacology and drug discovery - PMC [pmc.ncbi.nlm.nih.gov]
- 30. In vivo release of non-neuronal acetylcholine from the human skin as measured by dermal microdialysis: effect of botulinum toxin - PMC [pmc.ncbi.nlm.nih.gov]
- 31. jneurosci.org [jneurosci.org]
- 32. How can I measure brain acetylcholine levels in vivo? Advantages and caveats of commonly used approaches - PMC [pmc.ncbi.nlm.nih.gov]
- 33. OLB-PM-37621094 - National Genomics Data Center (CNCB-NGDC) [ngdc.cncb.ac.cn]

- To cite this document: BenchChem. [Methodology for Assessing Acetylcholine Release Enhancers: An Application and Protocol Guide]. BenchChem, [2026]. [Online PDF]. Available at: [https://www.benchchem.com/product/b1606934/docs#methodology-for-assessing-acetylcholine-release-enhancers-an-application-and-protocol-guide]

Disclaimer & Data Validity:

The information provided in this document is for Research Use Only (RUO) and is strictly not intended for diagnostic or therapeutic procedures. While BenchChem strives to provide accurate protocols, we make no warranties, express or implied, regarding the fitness of this product for every specific experimental setup.

© 2026 BenchChem. All rights reserved.

Technical Support: The protocols provided are for reference purposes. Unsure if this reagent suits your experiment?

Need Industrial/Bulk Grade? Request Custom Synthesis Quote

BenchChem

Our mission is to be the trusted global source of essential and advanced chemicals, empowering scientists and researchers to drive progress in science and industry.

Contact

Address: 3281 E Guasti Rd

Ontario, CA 91761, United States

Phone: (601) 213-4426

Email: info@benchchem.com

Contact our Ph.D. Support Team for a compatibility check

© 2026 BenchChem. All rights reserved.