Application Notes & Protocols: Microwave-Assisted Synthesis of Quinoline Derivatives

Author: BenchChem Technical Support Team. **Date**: March 2026

Compound of Interest		
Compound Name:	*2-Chloro-3-chloromethyl-6-methylquinoline*	
CAS No.:	*948291-18-7*	
Cat. No.:	*B1602318*	*Get Quote*

A Guide for Researchers in Medicinal Chemistry and Drug Development

Introduction: Accelerating Quinoline Synthesis for Modern Drug Discovery

The quinoline scaffold is a cornerstone in medicinal chemistry, forming the structural core of a vast number of therapeutic agents.[1] Its derivatives exhibit a remarkable breadth of pharmacological activities, including anticancer, antimalarial, antibacterial, and anti-inflammatory properties.[1][2][3] Prominent examples include the antimalarial drug chloroquine and the anticancer agent topotecan, highlighting the scaffold's significance in developing impactful medicines.[1]

Traditionally, the synthesis of quinoline derivatives has relied on classical named reactions that often require harsh conditions, prolonged reaction times, and result in modest yields.[4][5] In the fast-paced environment of drug discovery, such methods can create significant bottlenecks in generating diverse compound libraries for screening and lead optimization.

Microwave-assisted organic synthesis (MAOS) has emerged as a transformative technology, revolutionizing this field by offering a greener, more efficient alternative.[6][7][8] By directly and rapidly heating the reaction mixture, microwave irradiation dramatically reduces reaction times from hours to mere minutes, often leading to higher yields, improved product purity, and

© 2026 BenchChem. All rights reserved.

enhanced selectivity.[8][9] This guide provides detailed protocols for key microwave-assisted quinoline syntheses, explains the fundamental principles of the technology, and offers practical insights for its successful implementation in the laboratory.

The Engine of Acceleration: Understanding Microwave-Assisted Chemistry

Unlike conventional heating methods that rely on conduction and convection to transfer heat from an external source to the reaction mixture, microwave heating delivers energy directly to the molecules within the sample.[9][10] This volumetric and instantaneous heating is achieved through two primary mechanisms:

- Dipolar Polarization: Polar molecules, such as solvents or reagents with a dipole moment, continuously attempt to align themselves with the oscillating electric field of the microwave radiation.[10][11][12] This rapid molecular rotation and resulting friction generate heat efficiently and uniformly throughout the sample.[10][11]
- Ionic Conduction: In the presence of ions, the oscillating electric field induces ionic migration. The resistance to this ionic flow results in collisions, dissipating energy as heat.[11][12][13]

This direct energy transfer allows for rapid temperature elevation and the ability to "superheat" solvents in sealed vessels far beyond their atmospheric boiling points, creating high-pressure conditions that can dramatically accelerate reaction rates.[10][14] The result is a powerful tool for clean and efficient synthesis.[9][13]

Workflow for Microwave-Assisted Synthesis

The general workflow for performing a microwave-assisted reaction is straightforward and designed for safety and reproducibility.

© 2026 BenchChem. All rights reserved.

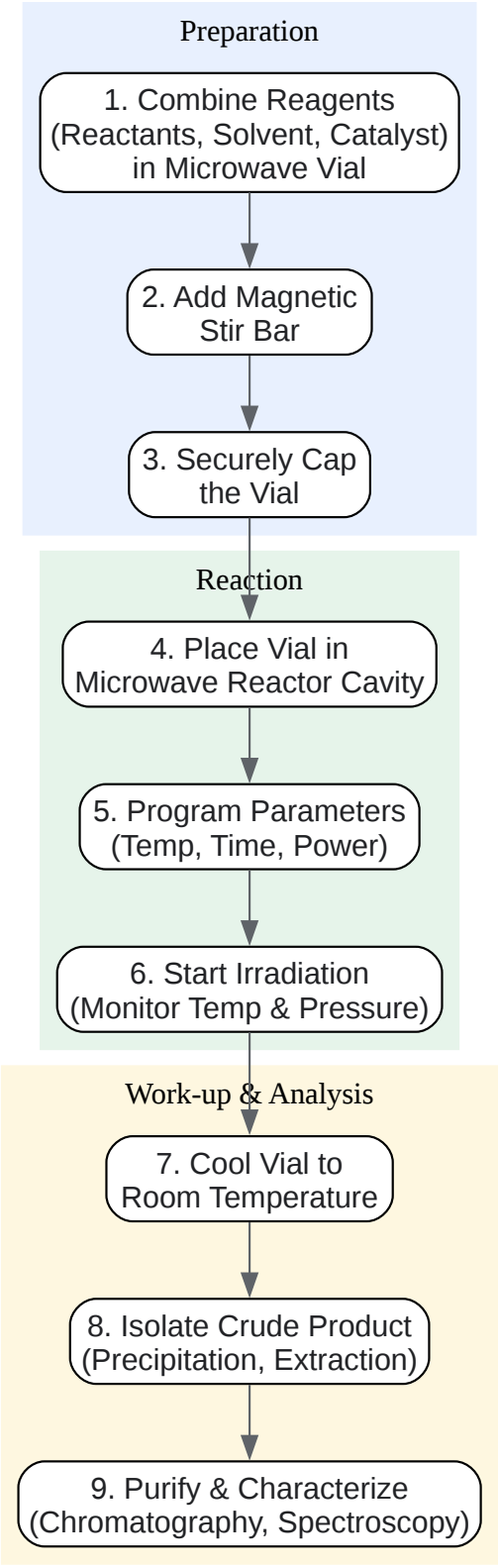

Click to download full resolution via product page

Caption: General experimental workflow for microwave-assisted synthesis.

© 2026 BenchChem. All rights reserved.

Core Protocols for Microwave-Assisted Quinoline Synthesis

Microwave irradiation has been successfully applied to numerous classical named reactions for quinoline synthesis. Below are detailed protocols for three of the most robust and widely used methods.

Protocol 1: Microwave-Assisted Friedländer Annulation

The Friedländer synthesis is a straightforward and atom-economical method involving the condensation and subsequent cyclodehydration of a 2-aminoaryl aldehyde or ketone with a compound containing an α-methylene group.[15] Microwave assistance makes this reaction exceptionally fast and efficient.

Reaction Scheme: 2-Aminoaryl Ketone + Cyclic Ketone → Fused Quinoline Derivative

Expert Insights: This protocol utilizes glacial acetic acid as both a solvent and an acid catalyst, which is a green and effective choice.[16] The use of a sealed microwave vial is critical to safely reach 160 °C, a temperature well above the boiling point of acetic acid, which is necessary to achieve the reaction in minutes.[14][16]

Step-by-Step Methodology:

- Place a 2-aminoaryl ketone (1.0 mmol) and a cyclic ketone (1.2 mmol) into a 10 mL microwave process vial equipped with a magnetic stir bar.[1]
- Add glacial acetic acid (5 mL) to the vial.[1]
- Securely seal the vial with a cap designed for high-pressure microwave reactions.
- Place the vial into the cavity of a dedicated microwave reactor.
- Set the reaction parameters: irradiate at a constant temperature of 160 °C for 5 minutes, with variable power and magnetic stirring.[1][16]
- After the irradiation is complete, allow the vial to cool to room temperature (below 50°C) before carefully opening it in a fume hood.[14]

© 2026 BenchChem. All rights reserved.

- Pour the reaction mixture into a beaker containing ice-water (approx. 50 mL).
- Neutralize the mixture by slowly adding a saturated sodium bicarbonate solution until effervescence ceases.
- Collect the resulting precipitate by vacuum filtration, wash thoroughly with water, and dry.
- The crude product can be further purified by recrystallization from a suitable solvent (e.g., ethanol) or by column chromatography.[1]

Protocol 2: Microwave-Assisted Doebner-von Miller Reaction

This reaction provides a versatile route to quinolines from anilines and α,β-unsaturated carbonyl compounds, often generated in situ from glycerol in the presence of an acid catalyst and an oxidizing agent.[1] Microwave irradiation effectively drives this complex multi-step reaction.

Reaction Scheme: Aniline + Glycerol --(H+, Oxidant)→ Substituted Quinoline

Expert Insights: The classical Doebner-von Miller reaction is notoriously harsh. Microwave heating provides precise temperature control and rapid energy input, allowing the reaction to proceed under more controlled conditions while drastically reducing the time required.[9] Safety is paramount here; this reaction should only be performed in a dedicated microwave reactor due to the use of strong acids and oxidizing agents at high temperatures.[17]

Step-by-Step Methodology:

- In a microwave process vial with a magnetic stir bar, carefully combine an aniline (4 mmol), glycerol (2.5 mL), arsenic(V) oxide (2.1 g), and concentrated sulfuric acid (4.2 mL).[1]
- Seal the vial and place it in the microwave reactor.
- Program the instrument to heat the mixture to a specified temperature (e.g., 140-160 °C) for a duration of 10-20 minutes with active stirring.

© 2026 BenchChem. All rights reserved.

- After the reaction, ensure the vial has cooled completely to a safe temperature before opening.
- Carefully pour the cooled reaction mixture into a beaker containing a slurry of ice and water.
- Basify the mixture to a pH of 9-10 by the slow addition of a concentrated base solution (e.g., NaOH or NH4OH).
- Collect the precipitated product by filtration, wash with water until the filtrate is neutral, and dry.[1]
- Purify the crude product by recrystallization.

Protocol 3: Microwave-Assisted Combes Quinoline Synthesis

The Combes synthesis involves the acid-catalyzed reaction of an aniline with a β-diketone.[5] The use of a solid acid catalyst under microwave irradiation offers a green and highly efficient approach, simplifying product work-up.[1][5]

Reaction Scheme: Aniline + β-Diketone --(Solid Acid Catalyst)→ Substituted Quinoline

Expert Insights: Employing a reusable solid acid catalyst like montmorillonite K-10 aligns with green chemistry principles.[1][18] The catalyst can often be recovered by simple filtration after the reaction. This protocol can also be adapted to solvent-free conditions, where the reactants are adsorbed onto the solid support, further enhancing its environmental credentials.[5][18]

Step-by-Step Methodology:

- In a microwave vial, mix an aniline (1.0 mmol), a β-diketone (1.1 mmol), and a catalytic amount of a solid acid catalyst (e.g., montmorillonite K-10, ~100 mg).[1]
- If performing under solvent-free conditions, thoroughly mix the components to ensure homogeneity.[5] Alternatively, a minimal amount of a high-boiling polar solvent like DMF or ethanol can be used.
- Seal the vial and place it in the microwave reactor.

© 2026 BenchChem. All rights reserved.

- Irradiate the mixture at a set temperature (e.g., 120-150 °C) for 5-15 minutes with stirring.[1]
- After cooling the vial to room temperature, add a suitable organic solvent (e.g., ethyl acetate or CH2Cl2) to dissolve the product.[5]
- Filter the mixture to remove the solid acid catalyst.
- Wash the organic phase with a saturated brine solution, dry it over anhydrous magnesium sulfate, and concentrate it in vacuo to isolate the crude product.[5]
- Purify the product by flash chromatography on silica gel.[5]

Comparative Data of Microwave-Assisted Protocols

The primary advantages of MAOS are clearly demonstrated when comparing reaction parameters against conventional methods.

Reaction Name	Typical Reactants	Catalyst / Solvent	Microwave Time	Microwave Temp.	Typical Yields
Friedländer Annulation	2-Aminobenzophenone, Cyclohexanone	Glacial Acetic Acid	5 min[1][16]	160 °C[1][16]	Excellent[16]
Doebner-von Miller	Aniline, Glycerol	H_2SO_4, As_2O_5	10-20 min	140-160 °C	Good
Combes Synthesis	Aniline, Acetylacetone	Montmorillonite K-10	5-15 min[1]	120-150 °C	High[5]

Safety: A Critical Consideration

While MAOS is a powerful tool, it requires strict adherence to safety protocols.

- Use Dedicated Equipment: Never use a domestic kitchen microwave oven.[17][19][20] Laboratory-grade reactors are designed with pressure and temperature sensors, safety

© 2026 BenchChem. All rights reserved.

interlocks, and corrosion-resistant cavities to handle chemical reactions safely.[14][20]

- Pressure Management: When heating solvents above their boiling points in sealed vessels, significant pressure builds up. Always use vials and caps specifically designed for this purpose and never exceed the manufacturer's recommended volume or pressure limits.[14][21]

- Avoid Superheating: Ensure adequate stirring to prevent localized superheating, especially in viscous mixtures.[17][21]

- Chemical Hazards: Be aware of potentially explosive functional groups (e.g., azides, nitro compounds) which can be sensitive to rapid heating.[17] Always start with small-scale reactions when exploring new chemistries.[17]

Conclusion and Future Outlook

Microwave-assisted synthesis has firmly established itself as an indispensable technique in modern organic and medicinal chemistry. For the synthesis of quinoline derivatives, it offers unparalleled advantages in speed, efficiency, and scalability, while often aligning with the principles of green chemistry.[2][6][9] By dramatically shortening discovery and development timelines, MAOS empowers researchers to rapidly generate and test novel quinoline-based compounds, accelerating the journey toward new therapeutic breakthroughs. Future developments will likely focus on integrating microwave synthesis with flow chemistry systems and exploring novel, reusable catalysts to further enhance the sustainability and efficiency of these vital transformations.

References

- Microwave chemistry - Wikipedia. Wikipedia.
- Microwave-Assisted Synthesis of Quinoline Derivatives: Application Notes and Protocols for Researchers. Benchchem.
- Microwave-Assisted Organic Synthesis: An Eco-Friendly Method of Green Chemistry. PMC.
- Importance of Microwave Heating in Organic Synthesis. Advanced Journal of Chemistry, Section A.
- Microwave-Assisted Organic Synthesis: A Green Chemistry Strategy. International Journal of Research in Pharmacy and Allied Science.
- Microwaves in Organic Synthetic Chemistry- A Greener Approach to Environmental Protection: An Overview.

© 2026 BenchChem. All rights reserved.

- Microwave Chemistry: General Features and Applications.
- Microwave-assisted Synthesis of Quinolines. Bentham Science Publishers.
- Microwave-Assisted Synthesis: 10x Faster Organic Reactions.
- Microwave-assisted synthesis. Anton Paar Wiki.
- Safety Considerations for Microwave Synthesis.
- Microwave-assisted Synthesis of Quinolines. Bentham Science Publisher.
- Microwave Reactor Safety. ETH Zurich.
- Environmentally Friendly Nafion-Mediated Friedländer Quinoline Synthesis under Microwave Irradiation: Application to One-Pot Synthesis of Substituted Quinolinyl Chalcones. Organic Chemistry Portal.
- Microwave-assisted, [Bmim]HSO4-catalyzed the Friedländer Quinoline Synthesis of Quinoline Under Solvent-free Conditions.
- Theory of Microwave Heating for Organic Synthesis.
- Efficient Microwave-Assisted Synthesis of Quinolines and Dihydroquinolines under Solvent-Free Conditions.
- Microwave-assisted Synthesis of 2-Methyl-4-Quinolinones via Combes Synthesis Catalyzed by Acidic Resin under Solvent-Free Condit. Asian Journal of Chemistry.
- Rapid and Efficient Microwave-Assisted Friedländer Quinoline Synthesis. PubMed. [Link]
- Organic Syntheses Procedure. Organic Syntheses.
- Advances in polymer based Friedlander quinoline synthesis. Semantic Scholar.
- Synthesis of Quinozoline-4-(3H)
- Microwave-Assisted Friedlaender Synthesis of Quinolines Derivatives as Potential Antiparasitic Agents.
- Microwave-Assisted Synthesis of Quinazolines and Quinazolinones: An Overview. Frontiers.
- Microwave-Assisted Synthesis of Phenothiazine and Qinoline Deriv
- Microwave-Assisted Synthesis of Diversely Substituted Quinoline-Based Dihydropyridopyrimidine and Dihydropyrazolopyridine Hybrids.
- Microwave-assisted catalyst-free multicomponent one-pot green synthesis of highly functionalized aminocyanopyridines and (4-hydroxy)quinolines in aqueous medium and its in silico studies. New Journal of Chemistry (RSC Publishing).
- Full article: Microwave-Assisted Synthesis of Quinoline Derivatives
- Microwave-assisted commercial copper-catalyzed aerobic oxidative synthesis of AChE quinazolinone inhibitors under solvent free conditions. PMC.
- Microwave Synthesis. Organic Chemistry Portal.
- Practical Microwave Synthesis for Organic Chemists: Strategies, Instruments, and Protocols. SciSpace.

© 2026 BenchChem. All rights reserved.

- (PDF) MICROWAVE ASSISTED CATALYST AND SOLVENT FREE EFFICIENT SYNTHESIS OF QUINOLINE DERIVATIVES BY THREE COMPONENT ONE POT AZA-DIELS-ALDER REACTION STRATEGY.
- Microwave-Promoted Synthesis Of Quinoline Heterocycles From Anilines. Journal of Namibian Studies.
- Synthesis of Quinaldines and Lepidines by a Doebner—Miller Reaction under Thermal and Microwave Irradiation Conditions Using Phosphotungstic Acid.
- MICROWAVE AND CONVENTIONAL SYNTHESIS OF NOVEL QUINOLINE DERIVATIVES: CLAISEN TYPE REARRANGEMENT. Der Pharma Chemica.
- Microwave-Assisted Knoevenagel-Doebner Reaction: An Efficient Method for Naturally Occurring Phenolic Acids Synthesis. PMC.
- Microwave-Assisted Knoevenagel-Doebner Reaction: An Efficient Method for Naturally Occurring Phenolic Acids Synthesis. Frontiers.
- A facile microwave-assisted protocol for rapid synthesis of N-acetylneuraminic acid congeners. PMC.

Need Custom Synthesis?

BenchChem offers custom synthesis for rare earth carbides and specific isotopiclabeling.

Email: info@benchchem.com or Request Quote Online.

Sources

- 1. pdf.benchchem.com [pdf.benchchem.com]
- 2. benthamdirect.com [benthamdirect.com]
- 3. eurekaselect.com [eurekaselect.com]
- 4. Environmentally Friendly Nafion-Mediated Friedländer Quinoline Synthesis under Microwave Irradiation: Application to One-Pot Synthesis of Substituted Quinolinyl Chalcones [organic-chemistry.org]
- 5. asianpubs.org [asianpubs.org]
- 6. Microwave-Assisted Organic Synthesis: An Eco-Friendly Method of Green Chemistry - PMC [pmc.ncbi.nlm.nih.gov]
- 7. ijrpas.com [ijrpas.com]
- 8. Microwave-Assisted Synthesis: 10x Faster Organic Reactions [eureka.patsnap.com]

© 2026 BenchChem. All rights reserved.

- 9. ajchem-a.com [ajchem-a.com]
- 10. Microwave-assisted synthesis | Anton Paar Wiki [wiki.anton-paar.com]
- 11. Microwave chemistry - Wikipedia [en.wikipedia.org]
- 12. Theory of Microwave Heating for Organic Synthesis [cem.com]
- 13. ijper.org [ijper.org]
- 14. Organic Syntheses Procedure [orgsyn.org]
- 15. researchgate.net [researchgate.net]
- 16. Rapid and Efficient Microwave-Assisted Friedländer Quinoline Synthesis - PubMed [pubmed.ncbi.nlm.nih.gov]
- 17. Safety Considerations for Microwave Synthesis [cem.com]
- 18. ajgreenchem.com [ajgreenchem.com]
- 19. Microwave Synthesis [organic-chemistry.org]
- 20. scispace.com [scispace.com]
- 21. chem.tamu.edu [chem.tamu.edu]

- To cite this document: BenchChem. [Application Notes & Protocols: Microwave-Assisted Synthesis of Quinoline Derivatives]. BenchChem, [2026]. [Online PDF]. Available at: [https://www.benchchem.com/product/b1602318#microwave-assisted-synthesis-of-quinoline-derivatives]

Disclaimer & Data Validity:

The information provided in this document is for Research Use Only (RUO) and is strictly not intended for diagnostic or therapeutic procedures. While BenchChem strives to provide accurate protocols, we make no warranties, express or implied, regarding the fitness of this product for every specific experimental setup.

Technical Support: The protocols provided are for reference purposes. Unsure if this reagent suits your experiment? [Contact our Ph.D. Support Team for a compatibility check]

Need Industrial/Bulk Grade? Request Custom Synthesis Quote

© 2026 BenchChem. All rights reserved.

BenchChem

Our mission is to be the trusted global source of essential and advanced chemicals, empowering scientists and researchers to drive progress in science and industry.

Contact

Address: 3281 E Guasti Rd

Ontario, CA 91761, United States

Phone: (601) 213-4426

Email: info@benchchem.com

© 2026 BenchChem. All rights reserved.