Technical Support Center: Navigating Regioselectivity in Imidazole Functionalization

Author: BenchChem Technical Support Team. **Date**: February 2026

Compound of Interest		
Compound Name:	*4-chloro-1-methyl-1H-imidazole*	
CAS No.:	*4897-21-6*	
Cat. No.:	*B1601591*	*Get Quote*

Welcome to the technical support center for the functionalization of imidazoles. This guide is designed for researchers, scientists, and drug development professionals who are navigating the complexities of achieving regiocontrol in their synthetic strategies. The imidazole core is a privileged scaffold in medicinal chemistry, and mastering its selective functionalization is key to unlocking novel therapeutic agents.[1][2][3] This resource provides in-depth troubleshooting guides, frequently asked questions (FAQs), and detailed experimental protocols to address the common challenges you may encounter.

Frequently Asked Questions (FAQs)

Q1: What are the fundamental factors governing regioselectivity in the functionalization of the imidazole ring?

A1: The regioselectivity of substitution reactions on the imidazole ring is a delicate interplay of several factors:

- Electronic Effects: The two nitrogen atoms in the imidazole ring have different electronic environments. N-1 is a pyrrole-type nitrogen, while N-3 is a pyridine-type nitrogen. The tautomeric nature of the N-H proton in unsubstituted imidazoles means that both nitrogens can be reactive. The presence of electron-withdrawing or electron-donating substituents on the ring significantly influences the nucleophilicity of the nitrogen atoms and the acidity of the

© 2026 BenchChem. All rights reserved.

C-H bonds.[4] For instance, an electron-withdrawing group at the C-4 position will make the adjacent N-3 less nucleophilic and the distal N-1 more so.

- Steric Hindrance: The accessibility of the nitrogen and carbon atoms on the imidazole ring plays a crucial role. Bulky substituents on the ring can shield adjacent positions, directing incoming reagents to less sterically hindered sites.[4][5] This principle can be exploited by using bulky protecting groups or alkylating agents to achieve desired regioselectivity.[5]

- Reaction Conditions: The choice of solvent, base, temperature, and catalyst can dramatically alter the outcome of a reaction.[5][6] For example, in N-alkylation, the use of a strong base will deprotonate the imidazole to form the imidazolide anion, where the reaction outcome is often governed by a combination of steric and electronic factors.[5] In contrast, reactions under neutral or acidic conditions involve the free base, and the tautomeric equilibrium becomes a dominant factor.[5]

Troubleshooting Guides

Problem 1: Poor Regioselectivity in N-Alkylation of a 4(5)-Substituted Imidazole

Scenario: "I am attempting to N-alkylate my 4-methylimidazole, but I am consistently getting a mixture of the 1,4- and 1,5-dimethylimidazole products. How can I favor the formation of one regioisomer over the other?"

Analysis and Solution: This is a classic challenge in imidazole chemistry. The tautomeric nature of the N-H proton in 4(5)-substituted imidazoles leads to two possible starting materials for alkylation, often resulting in a mixture of products. Here’s how you can troubleshoot this issue:

1. Exploit Steric Hindrance:

- Rationale: By increasing the steric bulk of either the substituent on the imidazole ring or the alkylating agent, you can disfavor substitution at the more hindered nitrogen atom.[5]

- Actionable Advice: If your synthesis allows, consider using a bulkier alkylating agent. For example, if you are using methyl iodide, switching to a bulkier agent like isopropyl iodide might improve selectivity for the less hindered nitrogen. Conversely, if you are synthesizing

© 2026 BenchChem. All rights reserved.

the imidazole from scratch, introducing a bulky substituent at a position that directs the alkylation to your desired nitrogen can be an effective strategy.[7][8]

2. Modulate Reaction Conditions:

- Rationale: The choice of base and solvent can significantly impact the regioselectivity of N-alkylation.[6]
- Actionable Advice:
  - Basic Conditions (e.g., NaH in THF): This combination often favors the thermodynamically more stable product. For many substituted indazoles, which share similarities with imidazoles in this regard, NaH in THF has been shown to provide high N-1 regioselectivity.[9]
  - Varying Base and Solvent: Experiment with different base/solvent combinations. For instance, compare the results of using NaOH in water versus conducting the reaction in ethanol without a strong base.[5]

3. Implement a Protecting Group Strategy (The Definitive Solution):

- Rationale: For ultimate control over regioselectivity, a protecting group strategy is often the most reliable approach. The use of a removable directing group allows for the unambiguous synthesis of a single regioisomer.[5][10] The (2-trimethylsilylethoxy)methyl (SEM) group is particularly effective for this purpose.[5][11][12]
- Workflow:
  - Protection: Protect the imidazole at N-1 with an SEM group.
  - Alkylation: Perform the alkylation, which will now be directed to the N-3 position.
  - Deprotection: Remove the SEM group to yield the desired N-1 alkylated imidazole. This "trans-N-alkylation" strategy provides excellent regioselectivity.[5]

© 2026 BenchChem. All rights reserved.

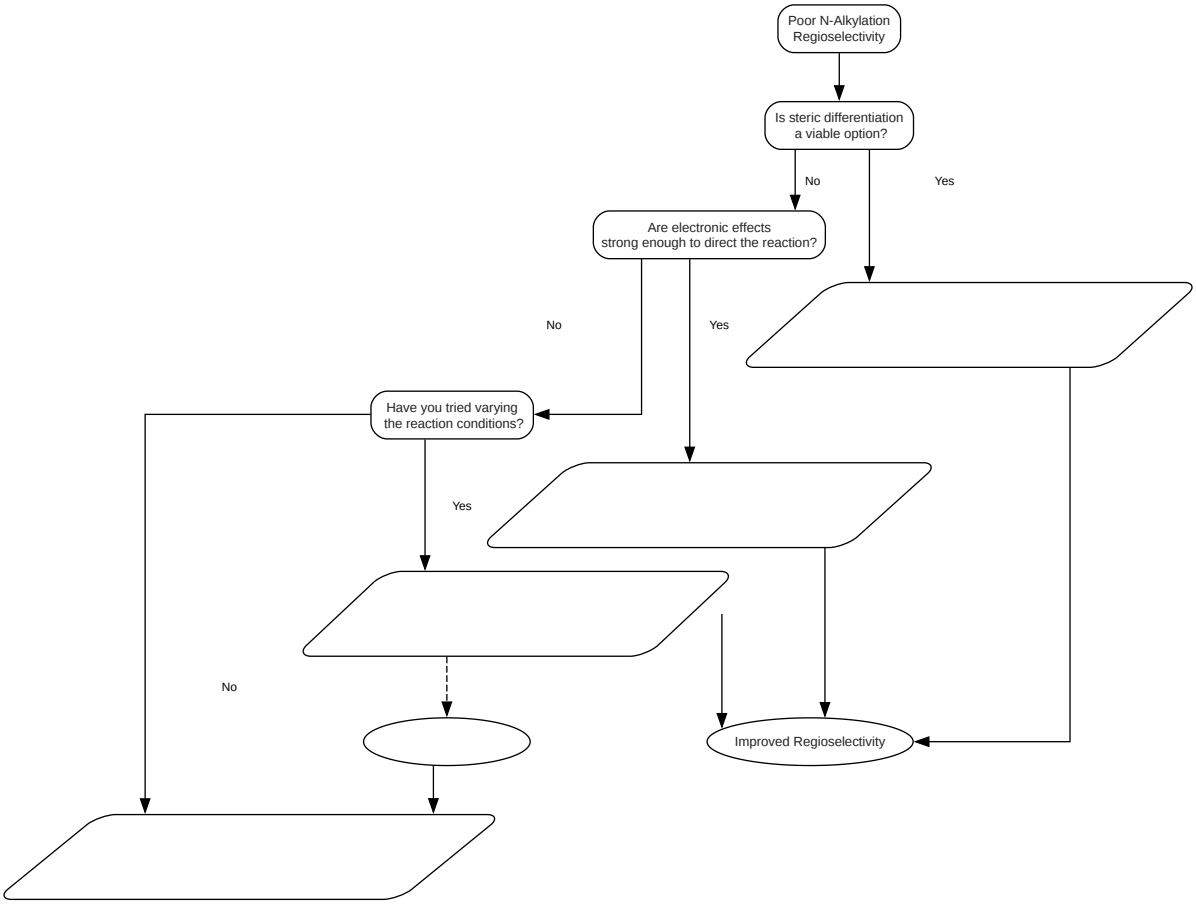

© 2026 BenchChem. All rights reserved.

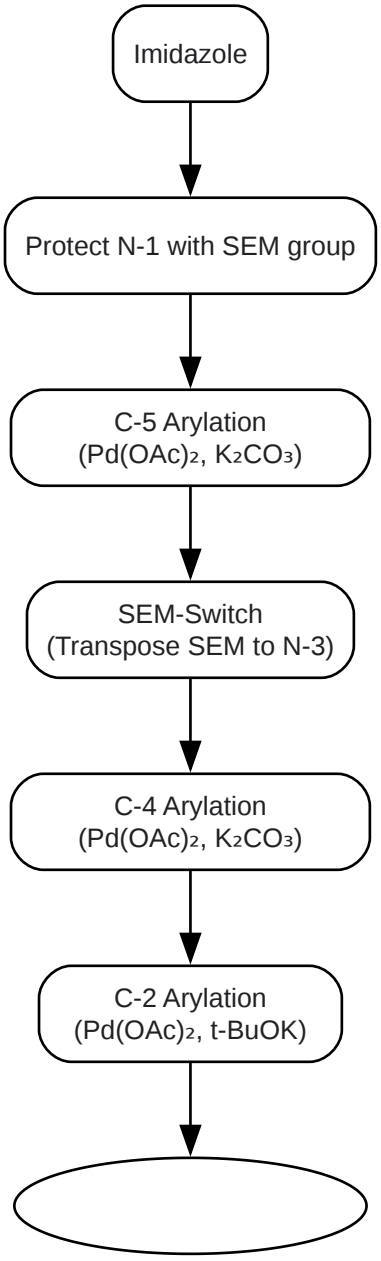

Click to download full resolution via product page

Need Custom Synthesis?

BenchChem offers custom synthesis for rare earth carbides and specific isotopiclabeling.

Email: info@benchchem.com or Request Quote Online.

Sources

- 1. Imidazole: Synthesis, Functionalization and Physicochemical Properties of a Privileged Structure in Medicinal Chemistry [ouci.dntb.gov.ua]
- 2. researchgate.net [researchgate.net]
- 3. researchgate.net [researchgate.net]
- 4. Imidazole: Synthesis, Functionalization and Physicochemical Properties of a Privileged Structure in Medicinal Chemistry - PMC [pmc.ncbi.nlm.nih.gov]
- 5. pdf.benchchem.com [pdf.benchchem.com]
- 6. pure.mpg.de [pure.mpg.de]
- 7. Regioselective synthesis of 1,4-disubstituted imidazoles - Organic & Biomolecular Chemistry (RSC Publishing) [pubs.rsc.org]
- 8. Regioselective synthesis of 1,4-disubstituted imidazoles - PubMed [pubmed.ncbi.nlm.nih.gov]
- 9. BJOC - Regioselective N-alkylation of the 1H-indazole scaffold; ring substituent and N-alkylating reagent effects on regioisomeric distribution [beilstein-journals.org]
- 10. jocpr.com [jocpr.com]
- 11. C–H Bonds as Ubiquitous Functionality: A General Approach to Complex Arylated Imidazoles via Regioselective Sequential Arylation of All Three C–H Bonds and Regioselective N-Alkylation Enabled by SEM-Group Transposition - PMC [pmc.ncbi.nlm.nih.gov]
- 12. pubs.acs.org [pubs.acs.org]

- To cite this document: BenchChem. [Technical Support Center: Navigating Regioselectivity in Imidazole Functionalization]. BenchChem, [2026]. [Online PDF]. Available at: [https://www.benchchem.com/product/b1601591#regioselectivity-issues-in-the-functionalization-of-imidazoles]

Disclaimer & Data Validity:

The information provided in this document is for Research Use Only (RUO) and is strictly not intended for diagnostic or therapeutic procedures. While BenchChem strives to provide accurate protocols, we make no warranties, express or implied, regarding the fitness of this product for every specific experimental setup.

Technical Support: The protocols provided are for reference purposes. Unsure if this reagent suits your experiment? [Contact our Ph.D. Support Team for a compatibility check]

© 2026 BenchChem. All rights reserved.

Need Industrial/Bulk Grade? Request Custom Synthesis Quote

BenchChem

Our mission is to be the trusted global source of essential and advanced chemicals, empowering scientists and researchers to drive progress in science and industry.

Contact

Address: 3281 E Guasti Rd

Ontario, CA 91761, United States

Phone: (601) 213-4426

Email: info@benchchem.com

© 2026 BenchChem. All rights reserved.