Application Note: A Detailed Protocol for the Regioselective Sulfonation of Hydroxybenzoic Acids

Author: BenchChem Technical Support Team. **Date**: May 2026

Compound of Interest

Compound Name:	*3-Hydroxy-4-sulfobenzoic acid*
CAS No.:	*88122-95-6*
Cat. No.:	*B1600019*

Get Quote

Audience: Researchers, scientists, and drug development professionals.

Abstract

This comprehensive guide provides a detailed protocol for the sulfonation of hydroxybenzoic acid isomers (2-hydroxybenzoic acid, 3-hydroxybenzoic acid, and 4-hydroxybenzoic acid). Moving beyond a simple recitation of steps, this document delves into the mechanistic principles governing the reaction, explaining the causality behind experimental choices in reagent selection, reaction conditions, and safety protocols. By grounding the practical application in theoretical understanding, this note serves as a self-validating system for researchers aiming to synthesize sulfonated hydroxybenzoic acids, which are valuable intermediates in the pharmaceutical and dye industries.

Part 1: Theoretical Background & Mechanistic Insights

© 2026 BenchChem. All rights reserved.

The sulfonation of an aromatic ring is a cornerstone reaction in organic synthesis, proceeding via an electrophilic aromatic substitution (SEAr) mechanism. The reaction introduces a sulfonic acid (-SO_3H) group onto the aromatic nucleus, profoundly altering the parent molecule's physical and chemical properties, such as increasing its water solubility.

The Electrophile: Sulfur Trioxide (SO_3)

The true electrophile in these reactions is sulfur trioxide (SO_3).[1][2] When using concentrated sulfuric acid (H_2SO_4), SO_3 is present in a small equilibrium concentration. For more vigorous reaction conditions, fuming sulfuric acid (oleum), which is a solution of SO_3 in H_2SO_4, provides a much higher concentration of the electrophile, accelerating the reaction.[2] The sulfur atom in SO_3 is highly electron-deficient due to the three electronegative oxygen atoms, making it a potent electrophile that is attracted to the electron-rich π-system of the benzene ring.[2]

Mechanism of Electrophilic Aromatic Sulfonation

The reaction proceeds in two main stages, typical of electrophilic aromatic substitution:

- Attack of the Electrophile: The π-electrons of the aromatic ring attack the sulfur atom of SO_3, forming a resonance-stabilized carbocation intermediate known as a sigma complex or arenium ion. This step is typically the rate-determining step.[3]

- Deprotonation: A weak base (often HSO_4^- or water) removes a proton from the carbon atom bearing the new C-S bond, restoring the aromaticity of the ring and yielding the aryl sulfonic acid.[2][3]

A key feature of sulfonation is its reversibility.[1] The reaction is favored in concentrated acid, while heating the aryl sulfonic acid in dilute aqueous acid can reverse the reaction, cleaving the C-S bond (desulfonation). This property is often exploited in synthesis to use the sulfonic acid group as a temporary blocking or directing group.

© 2026 BenchChem. All rights reserved.

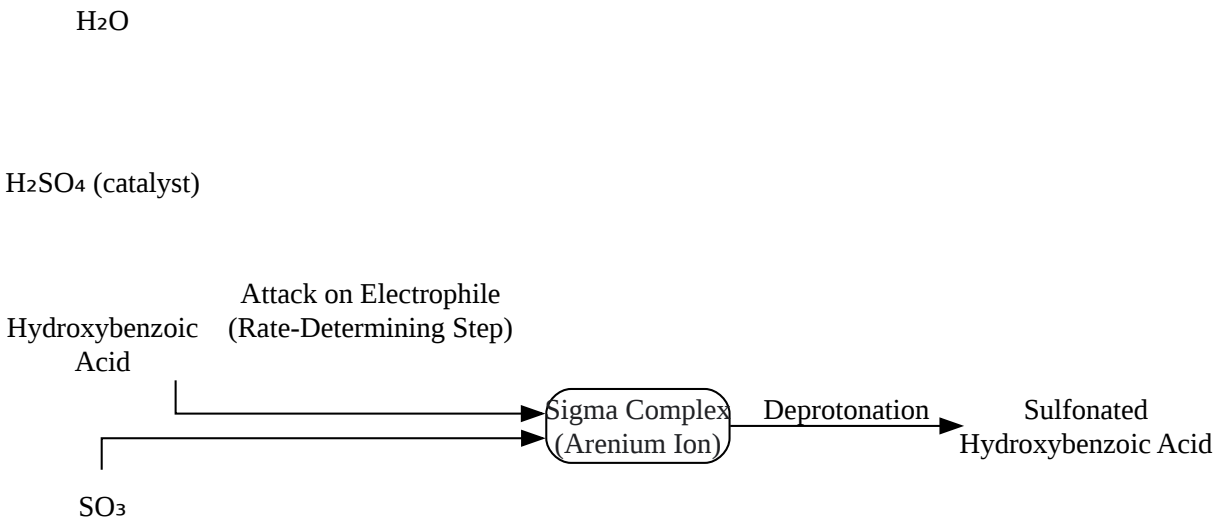

Click to download full resolution via product page

Caption: General mechanism of electrophilic aromatic sulfonation.

Regioselectivity: The Directing Effects of -OH and -COOH

The position of the incoming sulfonic acid group is dictated by the existing substituents on the benzoic acid ring. The hydroxyl (-OH) and carboxylic acid (-COOH) groups exert powerful, and sometimes conflicting, directing effects.

- Hydroxyl (-OH) Group: A strongly activating, ortho, para-directing group. It donates electron density to the ring through resonance, stabilizing the sigma complex when the attack occurs at the ortho and para positions.
- Carboxylic Acid (-COOH) Group: A deactivating, meta-directing group. It withdraws electron density from the ring through induction and resonance, making the ring less reactive and directing the incoming electrophile to the meta position to avoid placing a positive charge adjacent to the electron-withdrawing group.

© 2026 BenchChem. All rights reserved.

The final product distribution depends on the interplay of these effects for each isomer of hydroxybenzoic acid.

Part 2: Experimental Protocols

Safety First: Handling Sulfonating Agents

Concentrated sulfuric acid and oleum are extremely corrosive and highly reactive.[4][5] They can cause severe burns upon contact with skin and eyes and are fatal if ingested.[4][6] Oleum also releases toxic sulfur trioxide fumes.[7][8]

Mandatory Personal Protective Equipment (PPE):

- Acid-resistant gloves (butyl rubber is recommended).[4]
- Chemical safety goggles and a full-face shield.[4][5][7]
- Chemical-resistant apron or coveralls.[7]
- Work must be conducted in a certified chemical fume hood with excellent ventilation.

Emergency Procedures:

- Skin Contact: Immediately flush the affected area with copious amounts of water for at least 30 minutes and seek urgent medical attention.[6] Remove contaminated clothing while flushing.
- Eye Contact: Immediately flush eyes with gently flowing water for at least 30 minutes, holding eyelids open. Seek immediate medical attention.[6]
- Spills: Neutralize small spills with a suitable agent like sodium bicarbonate, working from the outside in.[7] Evacuate the area for large spills and notify emergency personnel.[7]
- Important Note:Never add water to concentrated acid. The exothermic reaction can cause violent splashing. Always add acid slowly to water (or other solutions) with constant cooling and stirring.[6]

General Experimental Workflow

© 2026 BenchChem. All rights reserved.

The following diagram outlines the typical workflow for the sulfonation of hydroxybenzoic acids.

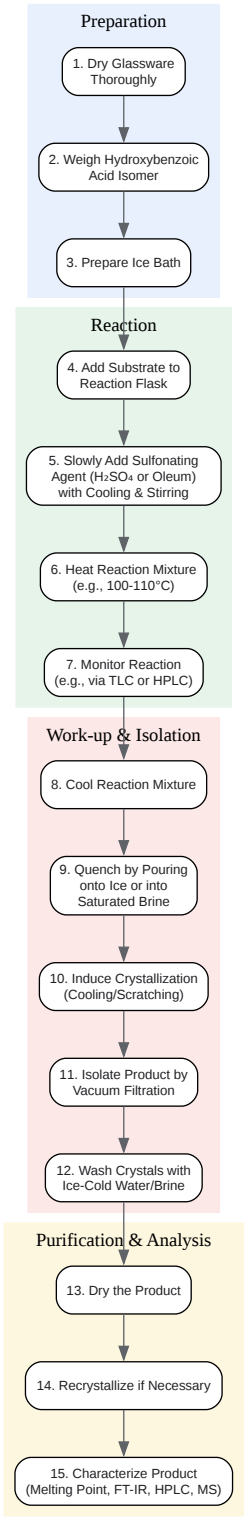

Click to download full resolution via product page

© 2026 BenchChem. All rights reserved.

Caption: Standard experimental workflow for laboratory-scale sulfonation.

Specific Protocol: Sulfonation of 2-Hydroxybenzoic Acid (Salicylic Acid)

This protocol is adapted from a reported synthesis of 5-Sulfosalicylic acid.[9] The primary product is 5-sulfosalicylic acid due to the powerful ortho, para-directing effect of the hydroxyl group, with the para position being sterically more accessible.

Materials:

- 2-Hydroxybenzoic acid (Salicylic Acid)
- Concentrated Sulfuric Acid (~98%)
- Saturated Sodium Chloride (NaCl) solution (Brine)
- Deionized Water
- Ice

Procedure:

- Place 2.0 g of salicylic acid into a 50 mL round-bottomed flask equipped with a magnetic stir bar.
- In a fume hood, carefully and slowly add 10.0 mL of concentrated sulfuric acid to the flask with gentle swirling. An ice bath can be used to manage any initial exotherm, though it may be minimal.[9]
- Fit the flask with an air condenser to prevent pressure buildup and place it in a pre-heated water or oil bath at 100°C.[9]
- Heat the mixture with stirring for approximately 1 hour. The solid should dissolve, and the solution may change color. After about 30-45 minutes, the mixture might begin to solidify as the product forms.[9]

© 2026 BenchChem. All rights reserved.

- After the heating period, remove the flask from the bath and allow it to cool to room temperature.
- Prepare a beaker containing 80 g of crushed ice or a saturated brine solution.[9]
- Slowly and carefully pour the cooled reaction mixture into the beaker with vigorous stirring. The product will precipitate as a white solid.
- Cool the entire mixture in an ice bath to ensure complete crystallization.
- Collect the crystalline product by vacuum filtration.
- Wash the crystals on the filter paper with small portions of ice-cold brine or water to remove residual acid.
- Dry the product. The expected yield of 5-sulfosalicylic acid is high, often over 85%.[9] The literature melting point is approximately 113°C (for the dihydrate).[9]

Part 3: Characterization and Data Analysis

Confirmation of the product's identity and purity is critical. A multi-technique approach is recommended.

- Melting Point: A simple and effective preliminary check for purity. A sharp melting point close to the literature value indicates high purity.
- High-Performance Liquid Chromatography (HPLC): An excellent method for determining purity and quantifying the product. A reversed-phase C18 column with a UV detector is typically suitable.[10][11] The mobile phase can be a gradient of acidified water and acetonitrile or methanol.
- Mass Spectrometry (MS): Coupled with HPLC (LC-MS), this technique provides the molecular weight of the product, confirming its identity.[12][13]
- Fourier-Transform Infrared (FT-IR) Spectroscopy: Used to identify key functional groups. Expect to see characteristic peaks for O-H (broad, for both phenol and carboxylic acid), C=O (carboxylic acid), and the new S=O and S-O stretches of the sulfonic acid group.[14]

© 2026 BenchChem. All rights reserved.

Part 4: Comparative Data & Discussion

The regiochemical outcome of the sulfonation of hydroxybenzoic acid isomers is a direct consequence of the directing effects of the substituents.

Substrate	Major Product(s)	Rationale for Regioselectivity	Typical Conditions
2-Hydroxybenzoic Acid	5-Sulfosalicylic acid	The strongly activating -OH group directs para (position 5). The ortho position (3) is less favored due to steric hindrance from the adjacent -COOH group.	Conc. H_2SO_4, 100°C[9]
3-Hydroxybenzoic Acid	2-Sulfo-3-hydroxybenzoic acid & 4-Sulfo-3-hydroxybenzoic acid	The -OH group directs ortho (positions 2 and 4) and para (position 6). The -COOH group directs meta (positions 5). The powerful -OH director dominates, leading to sulfonation primarily at positions 2 and 4.[15]	Conc. H_2SO_4 or Oleum, elevated temp.
4-Hydroxybenzoic Acid	3-Sulfo-4-hydroxybenzoic acid	The -OH group directs ortho (positions 3 and 5). The -COOH group directs meta (also positions 3 and 5). Both groups reinforce substitution at the same positions, leading to a single major product.	Conc. H_2SO_4 or Oleum, elevated temp.

© 2026 BenchChem. All rights reserved.

This table illustrates the critical thinking required for predicting reaction outcomes in substituted aromatic systems. For 3-hydroxybenzoic acid, achieving high selectivity for a single isomer can be challenging due to the competing ortho positions activated by the hydroxyl group.

Conclusion

The sulfonation of hydroxybenzoic acids is a versatile reaction that provides access to a range of valuable chemical intermediates. A successful outcome hinges on a thorough understanding of the underlying electrophilic aromatic substitution mechanism, the directing effects of the ring substituents, and strict adherence to safety protocols when handling corrosive sulfonating agents. The protocols and insights provided herein offer a robust framework for researchers to confidently and safely perform these syntheses and to rationally predict their regiochemical outcomes.

References

- Decachem. (2024). Oleum Safety Essentials: Protecting Workers and Ecosystems. [Link]
- University of Toronto. Acid/Oleum Safety. [Link]
- Fire Engineering. (1986). Sulfuric Acid (and Oleum). [Link]
- Hirsch, R. (2012). 5-Sulfosalicylic acid, 2-hydroxy-5-sulfobenzoic acid As part of my aim to find and develop simple organic syntheses for beginner. ResearchGate. [Link]
- Google Patents.
- Patel, N. (2024). Oleum Safety | Essential Tips: Handling, Storage, PPE and Emergency Procedures | H2S2O7 | SO3. YouTube. [Link]
- Rasayan Journal of Chemistry. (2017). 5-SULFOSALICYLIC ACID (5-SSA): AN EFFICIENT ORGANOCATALYST FOR THE SYNTHESIS OF 4-METHYLCOUMARINS VIA PECHMANN CONDENSATION. [Link]
- ResearchGate. (2021). Sulfonation of salicylic acid?. [Link]
- Chemcess. (2024). 3-Hydroxybenzoic Acid: Properties, Production And Uses. [Link]

© 2026 BenchChem. All rights reserved.

- Google Patents. DE556143C - Process for the preparation of compounds of sulfosalicylic acid with phenyldimethylpyrazolone or dimethylaminophenyldimethylpyrazolone.
- American Chemical Society. (2023). Convenient Synthesis of Salicylanilide Sulfonates from 1,2,3-Benzotriazin-4(3H)-ones and Organosulfonic Acids via Denitrogenativ. [Link]
- Google Patents.
- LookChem. (2023). The Chemistry of 3-Hydroxybenzoic Acid: Properties and Synthesis for Industrial Use. [Link]
- National University of Ireland, Maynooth. (2022). A HPLC-ESI-MS/MS Study of Hydroxybenzoic Acids and Related Derivatives in Commercial Seaweed Biostimulants and their Plant Growth Bioactivity. [Link]
- MDPI. (2022). Effect of Alkoxy Substituents on the Regioselectivity of Catalytic C-H Activation in Benzoic Acids: Experimental and DFT Study. [Link]
- Google Patents.
- Google Patents.
- Wikipedia. 3-Hydroxybenzoic acid. [Link]
- Wikipedia. Aromatic sulfonation. [Link]
- Google Patents. CN110540496A - A kind of preparation method of 3,5-dihydroxybenzoic acid.
- Justia Patents. (2000). sulphonation process and novel sulphonated compounds. [Link]
- Google Patents. US6218555B1 - Process for the preparation of alkanoyloxy-benzenesulfonic acids and salts thereof.
- Google Patents.
- Master Organic Chemistry. (2018). Nitration and Sulfonation Reactions In Electrophilic Aromatic Substitution. [Link]
- ResearchGate. (2019). Synthesis, characterisation, antioxidant and antibacterial properties of p-hydroxybenzoic acid-grafted chitosan conjugates. [Link]

© 2026 BenchChem. All rights reserved.

- Chemguide. the sulphonation of benzene - electrophilic substitution. [Link]
- ResearchGate. (2025). Mechanism of Sulfonation of 4-Hydroxyazobenzene. [Link]
- PubMed. (2014). Bioanalysis of propylparaben and p-hydroxybenzoic acid, and their sulfate conjugates in rat plasma by liquid chromatography-tandem mass spectrometry. [Link]
- ResearchGate. (2025). Development of a method by HPLC to determine LAS and its application in anaerobic reactors. [Link]
- Semantic Scholar. (2013). Validated HPLC method for identification and quantification of p-hydroxy benzoic acid and agnuside in Vitex negundo and Vitex trifolia. [Link]

Need Custom Synthesis?

BenchChem offers custom synthesis for rare earth carbides and specific isotopiclabeling.

Email: info@benchchem.com or Request Quote Online.

Sources

- 1. Aromatic sulfonation - Wikipedia [en.wikipedia.org]
- 2. chemguide.co.uk [chemguide.co.uk]
- 3. masterorganicchemistry.com [masterorganicchemistry.com]
- 4. sulphuric-acid.com [sulphuric-acid.com]
- 5. fireengineering.com [fireengineering.com]
- 6. CCOHS: Sulfuric Acid [ccohs.ca]
- 7. Oleum Safety Essentials: Protecting Workers and Ecosystems [decachem.com]
- 8. youtube.com [youtube.com]
- 9. researchgate.net [researchgate.net]
- 10. researchgate.net [researchgate.net]
- 11. semanticscholar.org [semanticscholar.org]
- 12. vuir.vu.edu.au [vuir.vu.edu.au]

- 13. Bioanalysis of propylparaben and p-hydroxybenzoic acid, and their sulfate conjugates in rat plasma by liquid chromatography-tandem mass spectrometry - PubMed [pubmed.ncbi.nlm.nih.gov]
- 14. researchgate.net [researchgate.net]
- 15. chemcess.com [chemcess.com]
- To cite this document: BenchChem. [Application Note: A Detailed Protocol for the Regioselective Sulfonation of Hydroxybenzoic Acids]. BenchChem, [2026]. [Online PDF]. Available at: [https://www.benchchem.com/product/b1600019/docs#application-note-a-detailed-protocol-for-the-regioselective-sulfonation-of-hydroxybenzoic-acids]

Disclaimer & Data Validity:

The information provided in this document is for Research Use Only (RUO) and is strictly not intended for diagnostic or therapeutic procedures. While BenchChem strives to provide accurate protocols, we make no warranties, express or implied, regarding the fitness of this product for every specific experimental setup.

Technical Support: The protocols provided are for reference purposes. Unsure if this reagent suits your experiment?

Need Industrial/Bulk Grade? Request Custom Synthesis Quote

BenchChem

Our mission is to be the trusted global source of essential and advanced chemicals, empowering scientists and researchers to drive progress in science and industry.

Contact

Address: 3281 E Guasti Rd

Ontario, CA 91761, United States

Phone: (601) 213-4426

Email: info@benchchem.com

© 2026 BenchChem. All rights reserved.

Contact our Ph.D. Support Team for a compatibility check

© 2026 BenchChem. All rights reserved.