Technical Support Center: BMY-25271 Treatment

Author: BenchChem Technical Support Team. **Date**: April 2026

Compound of Interest	
Compound Name:	*BMY-25271*
CAS No.:	*78441-82-4*
Cat. No.:	*B1599873*

Get Quote

Welcome to the technical support center for **BMY-25271**, a potent and selective histamine H2 receptor antagonist. This resource is designed for researchers, scientists, and drug development professionals to address common questions and troubleshoot unexpected results during in vitro and in vivo experiments involving **BMY-25271** and other novel histamine H2 receptor antagonists.

Frequently Asked Questions (FAQs)

Q1: What is the mechanism of action of **BMY-25271**?

BMY-25271 is a competitive antagonist of the histamine H2 receptor. It selectively binds to H2 receptors on the basolateral membrane of gastric parietal cells, which prevents histamine from binding and thereby blocks the downstream signaling pathway that leads to gastric acid secretion.[1][2][3] This action is analogous to other well-known H2 receptor antagonists like cimetidine and ranitidine.[1]

Q2: How does the potency of **BMY-25271** compare to other H2 receptor antagonists?

Early in vivo studies have indicated that **BMY-25271** is a highly potent histamine H2 receptor antagonist. For oral administration, its effective dose (ED50) for inhibiting gastric acid secretion

© 2026 BenchChem. All rights reserved.

has been reported to be significantly lower than that of cimetidine and ranitidine.

Compound	Oral ED50 (mg/kg)
BMY-25271	0.093
Ranitidine	0.97
Cimetidine	6.9

Q3: What are the potential off-label or secondary effects of H2 receptor antagonists that I should be aware of in my experiments?

While primarily known for their effects on gastric acid, histamine H2 receptors are also found in other tissues, which can lead to off-label or unexpected effects in experimental models. For instance, some H2 receptor antagonists have been shown to have immunomodulatory effects, potentially by inhibiting suppressor T-lymphocyte activity.[4] Additionally, effects on cellular proliferation in certain cell lines have been observed, which are independent of acid inhibition.[5] Researchers should consider these potential secondary effects when designing experiments and interpreting data.

Q4: Can H2 receptor antagonists function as inverse agonists?

Yes, some H2 receptor antagonists have been shown to act as inverse agonists rather than neutral antagonists.[3] This is due to the constitutive (spontaneous, agonist-independent) activity of the H2 receptor. An inverse agonist will inhibit this basal activity, while a neutral antagonist will only block the action of an agonist. This distinction can be important when interpreting results in cellular assays where the receptor may have high constitutive activity.

Troubleshooting Unexpected Results

Here are some common unexpected results that researchers may encounter when working with **BMY-25271** or other novel histamine H2 receptor antagonists, along with troubleshooting guidance.

Issue 1: Higher than expected histamine-induced activity in the presence of **BMY-25271** in basophil or mast cell-based assays.

© 2026 BenchChem. All rights reserved.

- Unexpected Result: Instead of pure antagonism, you observe an augmentation of histamine release at low concentrations of **BMY-25271** when studying antigen-induced histamine release from basophils.

- Possible Cause: This phenomenon has been observed with other H2 antagonists.[6] It is hypothesized that by blocking the H2 receptor-mediated negative feedback loop of histamine on its own release, the antagonist can lead to an enhanced release under certain conditions, especially when the initial histamine release is low.[6]

- Troubleshooting Steps:

  - Vary Agonist Concentration: Test a wider range of antigen concentrations to see if the augmentation is dependent on the level of initial histamine release.

  - Control for H1 Receptors: Ensure that the observed effect is specific to H2 receptor blockade by co-incubating with an H1 receptor antagonist to isolate the H2-mediated pathway.

  - Time-Course Experiment: Investigate the kinetics of histamine release, as the timing of the antagonist's effect on the feedback loop may be critical.

Issue 2: Inconsistent antagonist affinity (pA2 or Kb values) across different cellular assays.

- Unexpected Result: You calculate different antagonist affinity values for **BMY-25271** when comparing results from a cAMP accumulation assay and a reporter gene assay.

- Possible Cause: The apparent affinity of an antagonist can be influenced by the specific signaling pathway being measured and the duration of the assay.[7] Short-term assays like cAMP measurement may reflect a more direct antagonism, while longer-term assays like gene transcription can be influenced by receptor desensitization, internalization, and signaling through multiple pathways (e.g., Gs and Gi).[7][8]

- Troubleshooting Steps:

  - Assay Time-Course: Perform a time-course experiment for both assays to determine if the observed antagonist effect is time-dependent.

© 2026 BenchChem. All rights reserved.

- Pathway-Specific Inhibitors: Use inhibitors of different G-protein pathways (e.g., pertussis toxin for Gi) to dissect the signaling pathways involved in your cellular model.[8]
- Binding Assays: Correlate your functional assay data with direct radioligand binding assays to determine the binding affinity (Ki) of **BMY-25271**, which should be independent of the downstream signaling pathway being measured.[9]

Issue 3: **BMY-25271** appears to act as a non-competitive antagonist in a FLIPR-based calcium assay.

- Unexpected Result: In a Fluorescent Imaging Plate Reader (FLIPR) assay measuring intracellular calcium mobilization, **BMY-25271** not only shifts the histamine concentration-response curve to the right but also depresses the maximal response, which is characteristic of non-competitive antagonism.
- Possible Cause: This "insurmountable antagonism" can be an artifact of the assay conditions, particularly in rapid, transient signaling assays like FLIPR.[10] A lack of equilibrium between the agonist, antagonist, and receptor within the short duration of the assay can lead to an apparent non-competitive effect for a truly competitive antagonist.[10]
- Troubleshooting Steps:
  - Increase Pre-incubation Time: Extend the pre-incubation time with **BMY-25271** to ensure that the antagonist has reached equilibrium with the receptor before adding histamine.
  - Alternative Assay: Validate the findings using an endpoint or cumulative response assay, such as a phosphoinositide hydrolysis assay, which may allow for better equilibrium to be reached.[10]
  - Data Analysis: Apply the generalized Cheng-Prusoff equation to the antagonist concentration-response curves for inhibition of fixed histamine concentrations to calculate an apparent pKb value, which can often provide a more accurate measure of affinity for competitive antagonists under these non-equilibrium conditions.[10]

Experimental Protocols

Key Experimental Workflow: In Vitro Histamine H2 Receptor Antagonist Activity Assessment

© 2026 BenchChem. All rights reserved.

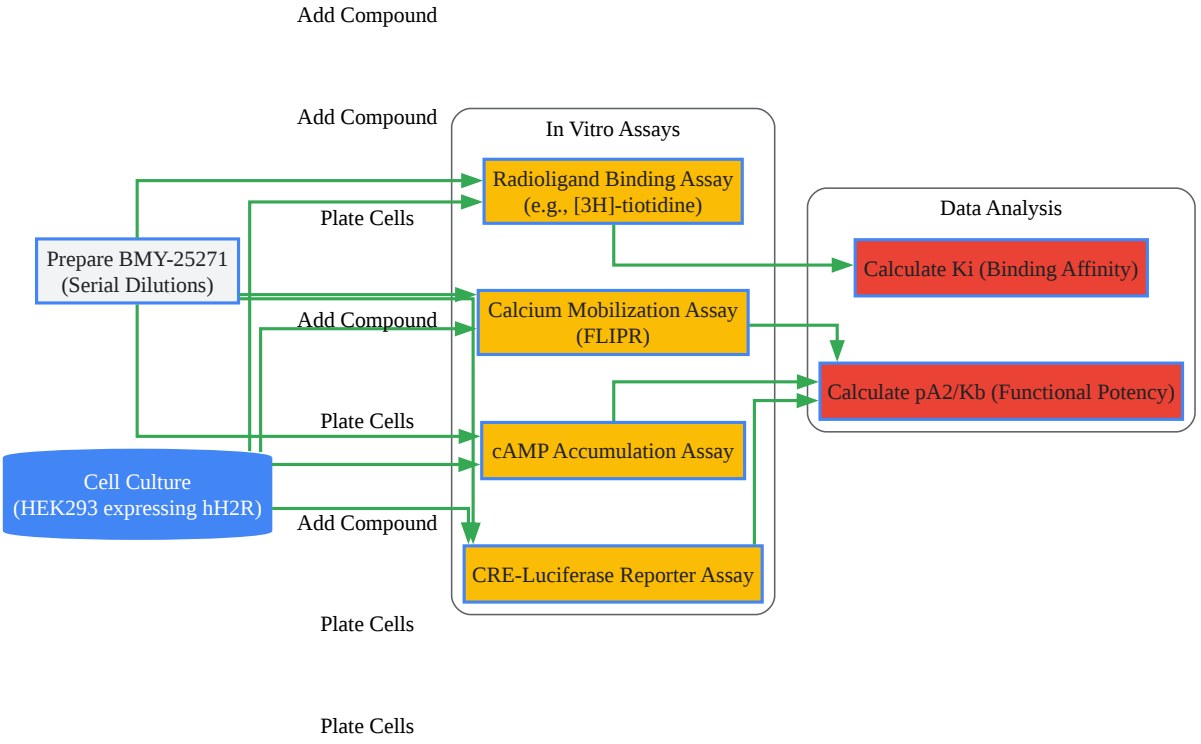

Click to download full resolution via product page

Workflow for in vitro characterization of **BMY-25271**.

Methodology for cAMP Accumulation Assay:

- Cell Seeding: Seed HEK293 cells stably expressing the human histamine H2 receptor into 96-well plates and culture overnight.

© 2026 BenchChem. All rights reserved.

- Pre-incubation: Wash the cells with assay buffer and pre-incubate with various concentrations of **BMY-25271** or vehicle control for 30 minutes at 37°C.
- Stimulation: Add a fixed concentration of histamine (e.g., EC80) to the wells and incubate for 15 minutes at 37°C.
- Lysis and Detection: Lyse the cells and measure the intracellular cAMP levels using a commercially available cAMP assay kit (e.g., HTRF, ELISA).
- Data Analysis: Plot the inhibition of the histamine-induced cAMP response against the concentration of **BMY-25271** to determine the IC50, which can then be used to calculate the antagonist affinity (Kb).

Signaling Pathway Diagram

Histamine H2 Receptor Signaling and Point of Inhibition by **BMY-25271**

© 2026 BenchChem. All rights reserved.

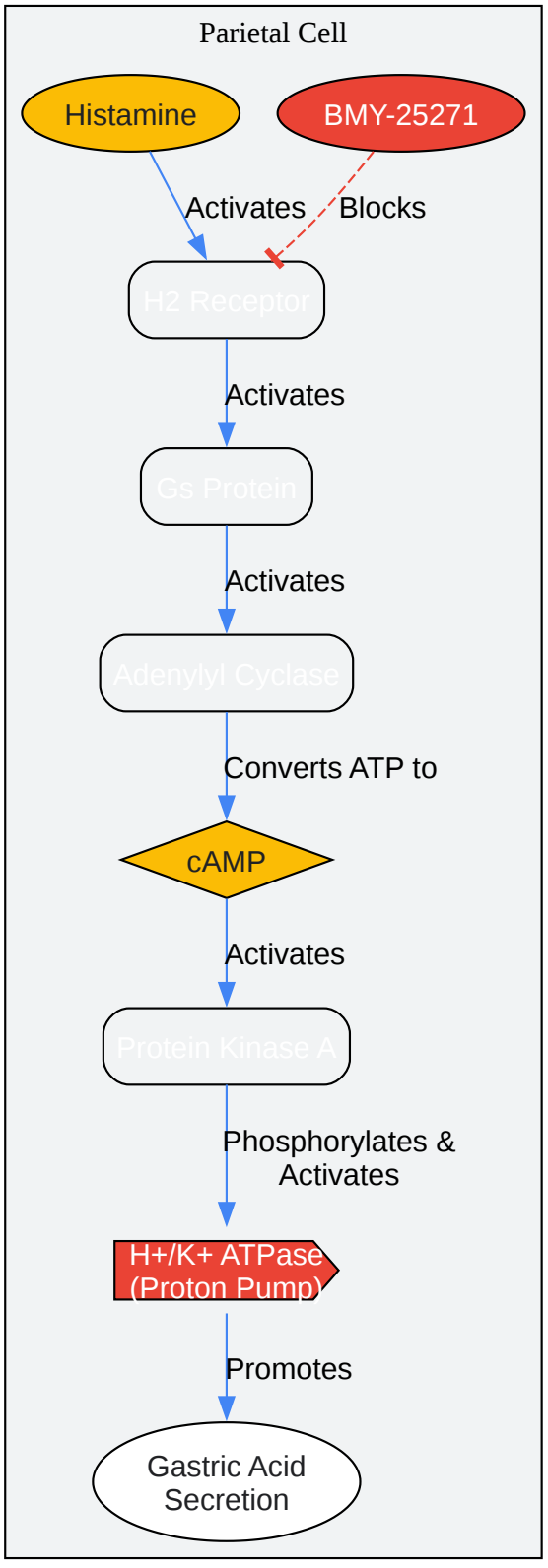

Click to download full resolution via product page

BMY-25271 competitively blocks histamine binding to the H2 receptor.

© 2026 BenchChem. All rights reserved.

Need Custom Synthesis?

BenchChem offers custom synthesis for rare earth carbides and specific isotopiclabeling.

Email: info@benchchem.com or Request Quote Online.

References

- 1. Histamine Type-2 Receptor Antagonists (H2 Blockers) - LiverTox - NCBI Bookshelf [ncbi.nlm.nih.gov]
- 2. H2 Blockers - StatPearls - NCBI Bookshelf [ncbi.nlm.nih.gov]
- 3. H2 receptor antagonist - Wikipedia [en.wikipedia.org]
- 4. researchgate.net [researchgate.net]
- 5. Histamine H2-receptor antagonists stimulate proliferation but not migration of human gastric mucosal cells in vitro - PubMed [pubmed.ncbi.nlm.nih.gov]
- 6. H2 antihistamines augment antigen-induced histamine release from human basophils in vitro - PubMed [pubmed.ncbi.nlm.nih.gov]
- 7. A study of antagonist affinities for the human histamine H2 receptor - PMC [pmc.ncbi.nlm.nih.gov]
- 8. Label-free versus conventional cellular assays: Functional investigations on the human histamine H1 receptor - PubMed [pubmed.ncbi.nlm.nih.gov]
- 9. The use of an in vitro binding assay to predict histamine H2-antagonist activity - PubMed [pubmed.ncbi.nlm.nih.gov]
- 10. Analysis of Apparent Noncompetitive Responses to Competitive H(1)-Histamine Receptor Antagonists in Fluorescent Imaging Plate Reader-Based Calcium Assays - PubMed [pubmed.ncbi.nlm.nih.gov]
- To cite this document: BenchChem. [Technical Support Center: BMY-25271 Treatment]. BenchChem, [2026]. [Online PDF]. Available at: [https://www.benchchem.com/product/b1599873/docs#technical-support-center-bmy-25271-treatment]

Disclaimer & Data Validity:

The information provided in this document is for Research Use Only (RUO) and is strictly not intended for diagnostic or therapeutic procedures. While BenchChem strives to provide accurate protocols, we make no warranties, express or implied, regarding the fitness of this product for every specific experimental setup.

Technical Support: The protocols provided are for reference purposes. Unsure if this reagent suits your experiment?

Need Industrial/Bulk Grade? Request Custom Synthesis Quote

BenchChem

Our mission is to be the trusted global source of essential and advanced chemicals, empowering scientists and researchers to drive progress in science and industry.

Contact

Address: 3281 E Guasti Rd

Ontario, CA 91761, United States

Phone: (601) 213-4426

Email: info@benchchem.com

Contact our Ph.D. Support Team for a compatibility check

© 2026 BenchChem. All rights reserved.