preventing self-dimerization during ketene synthesis

Author: BenchChem Technical Support Team. **Date**: May 2026

Compound of Interest

Compound Name:	*Methyl 2-methyloxirane-2-carboxylate*
CAS No.:	*58653-97-7*
Cat. No.:	*B1598165*

Get Quote

Ketene Dimerization Technical Support Center

Welcome to the technical support center for ketene synthesis. This guide is designed for researchers, chemists, and drug development professionals who encounter challenges with the inherent instability of ketene intermediates, specifically their rapid self-dimerization. Here, we provide in-depth, experience-driven answers to common problems, explaining not just what to do, but why it works.

Part 1: Frequently Asked Questions (FAQs)

Q1: Why does my ketene dimerize so quickly? I'm losing significant yield to diketene formation.

A1: This is the most fundamental challenge in ketene chemistry. Ketenes are inherently unstable and prone to dimerization via a [2+2] cycloaddition reaction.[1][2] This process is thermally allowed and often kinetically favorable. The mechanism involves the LUMO of one ketene molecule interacting with the HOMO of another in a suprafacial-antarafacial approach, leading to the formation of a cyclobutanedione derivative, commonly called a diketene.[3] The

© 2026 BenchChem. All rights reserved.

high reactivity stems from the electron-deficient central carbon of the C=C=O system, making it highly electrophilic and susceptible to nucleophilic attack—even from another ketene molecule.[3][4] The process is often so rapid that ketenes must be generated and used in situ to avoid isolation.[5][6]

Here is a simplified representation of the dimerization pathway:

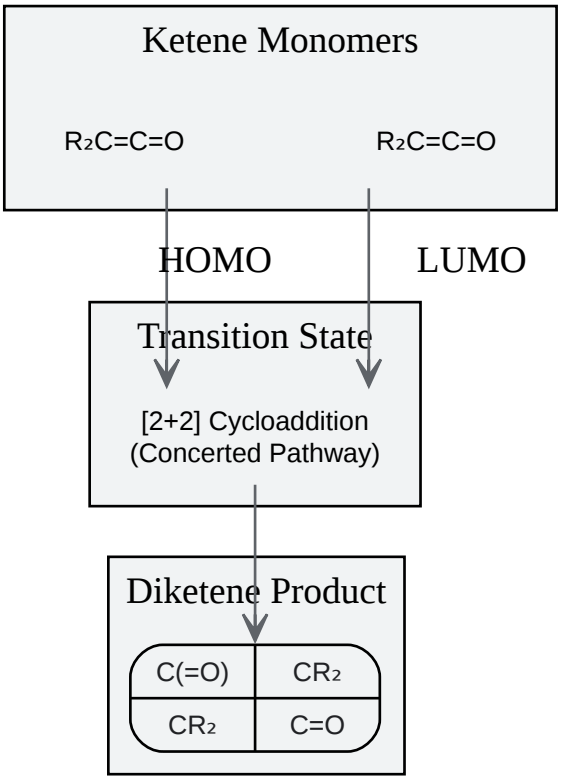

Click to download full resolution via product page

Caption: Ketene [2+2] cycloaddition dimerization pathway.

Part 2: Troubleshooting Guides for Common Synthesis Methods

This section addresses specific problems encountered during the two most common ketene generation methods.

Guide 1: Dehydrohalogenation of Acyl Chlorides

© 2026 BenchChem. All rights reserved.

This method involves treating an acyl chloride with a tertiary amine base to eliminate HCl.[2][6] While effective, it's highly susceptible to dimerization if not properly controlled.

Q2: I'm generating a ketene from an acyl chloride and triethylamine (TEA), but my primary product is the dimer. How can I fix this?

A2: This is a classic issue of reaction kinetics. The rate of the bimolecular dimerization reaction is competing with, and in your case, out-pacing the rate of your desired subsequent reaction. Here's a systematic troubleshooting approach:

Step 1: Drastically Lower the Reaction Temperature.

- The Problem: Dimerization has a higher kinetic order than both ketene formation and its reaction with a trapping agent. At higher temperatures (even 0 °C or room temperature), the rate of dimerization is exponentially faster.
- The Solution: Perform the reaction at -78 °C (a dry ice/acetone bath). This significantly suppresses the rate of the bimolecular dimerization, allowing the in situ trapping reaction to become the dominant pathway. The presence of ammonium salt byproducts from this method can sometimes interfere with subsequent steps, making temperature control even more critical.[6]

Step 2: Control the Reagent Addition Rate.

- The Problem: Adding the base or acyl chloride too quickly creates a high local concentration of the ketene intermediate, promoting self-reaction.
- The Solution: Employ slow, dropwise addition of the limiting reagent (usually the acyl chloride) to a solution containing the base and your trapping agent.[7] This ensures the instantaneous concentration of the ketene remains low, favoring reaction with the trapping agent over another ketene molecule.

Step 3: Re-evaluate Your Choice of Base.

- The Problem: While triethylamine is common, its resulting ammonium salt can sometimes complicate reactions. Furthermore, less-than-ideal bases can lead to side reactions.

© 2026 BenchChem. All rights reserved.

- The Solution: Consider using a bulkier, non-nucleophilic base like diisopropylethylamine (Hünig's base). Bulky bases can be more effective in promoting the desired elimination while minimizing side reactions.[8] For sensitive applications where ammonium salts are problematic, heterogeneous or "shuttle" base systems have been developed, such as using NaH with a crown ether and a catalytic amount of a tertiary amine to act as a proton shuttle.[9] This generates benign byproducts like NaCl and H_2.[9]

Troubleshooting Workflow: Dehydrohalogenation Method

© 2026 BenchChem. All rights reserved.

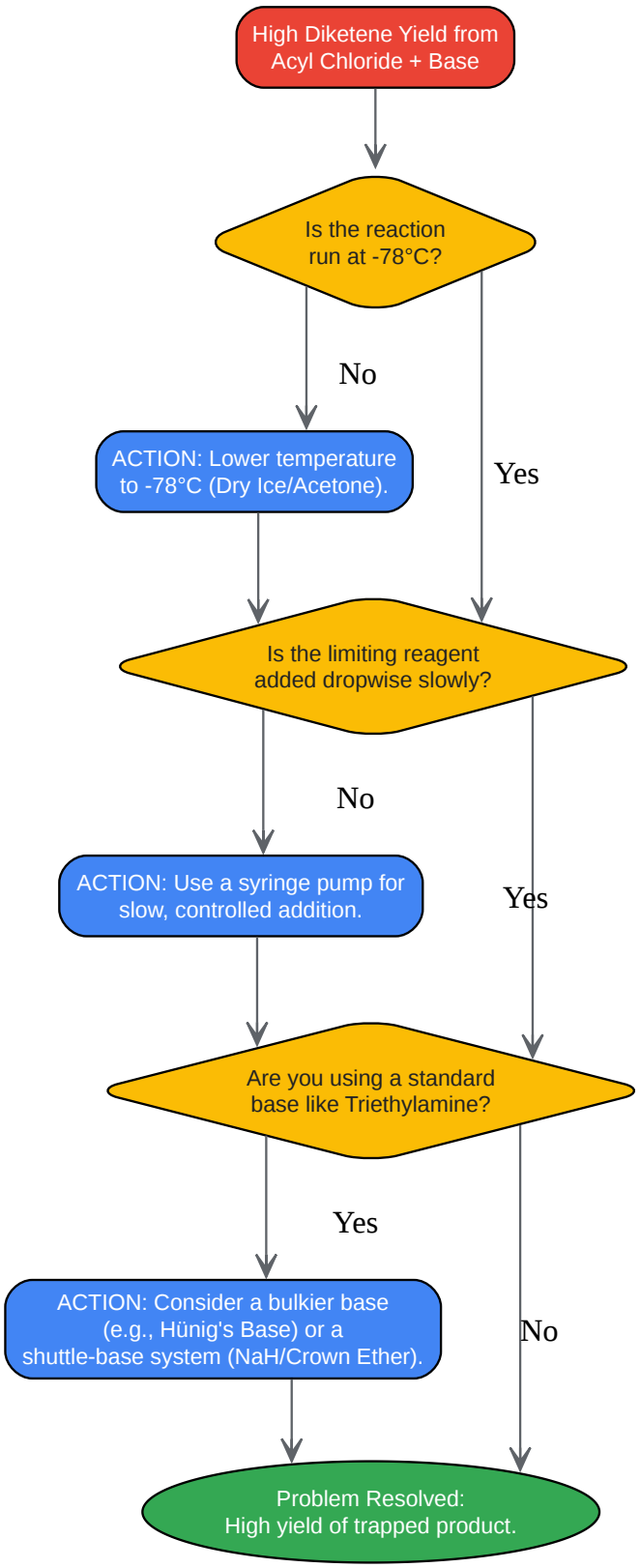

Click to download full resolution via product page

Caption: Troubleshooting decision tree for ketene dimerization.

© 2026 BenchChem. All rights reserved.

Guide 2: Wolff Rearrangement

The Wolff rearrangement converts an α-diazoketone into a ketene, typically induced by heat, light (photolysis), or a metal catalyst (like Ag_2O).[5][10] The ketene is a transient intermediate that must be trapped.[10][11]

Q3: My Wolff rearrangement is producing the dimer alongside my desired trapped product. How can I improve the efficiency of the trapping reaction?

A3: In the Wolff rearrangement, the rate of ketene generation must be synchronized with the rate of its consumption by a nucleophile. If the ketene is generated faster than it can be trapped, it will dimerize.

Step 1: Increase the Concentration of the Trapping Agent.

- The Problem: If the nucleophile (e.g., an alcohol or amine) is present in a low concentration, the probability of a ketene molecule colliding with it is lower than the probability of it colliding with another ketene molecule.
- The Solution: Whenever possible, use the nucleophilic trapping agent as the solvent for the reaction. For example, if you are synthesizing an ester, run the rearrangement in the desired alcohol as the solvent. This ensures the nucleophile is in vast excess and immediately available to trap the ketene as it forms.[12]

Step 2: Ensure the Trapping Agent is Present During Generation.

- The Problem: Attempting to generate the ketene first and then add the nucleophile is a common mistake that almost guarantees dimerization.
- The Solution: The trapping agent must be present in the reaction vessel during the entire ketene generation process. The goal is in situ trapping, not sequential addition. For photochemical rearrangements, ensure the solution of the α-diazoketone and the trapping agent is irradiated simultaneously.[13]

Step 3: Optimize the Catalyst or Generation Conditions.

© 2026 BenchChem. All rights reserved.

- The Problem: The choice of catalyst or energy source can influence the rate of ketene formation. A very rapid, uncontrolled generation can overwhelm the trapping agent.

- The Solution: For metal-catalyzed reactions, titrate the catalyst loading. Sometimes a lower catalyst loading provides a slower, more controlled rate of ketene formation, allowing the trapping reaction to keep pace. Silver(I) oxide is a common and effective choice.[10] For thermal rearrangements, carefully control the temperature to maintain a steady, manageable rate of nitrogen extrusion.[5]

Part 3: Advanced Strategies & Data

Q4: Are there any advanced instrumental techniques to prevent dimerization, especially on a larger scale?

A4: Yes, continuous flow chemistry is an exceptionally powerful tool for managing highly reactive intermediates like ketenes.[14][15]

- Principle: A flow reactor consists of narrow-gauge tubing passing through controlled heating or cooling zones. Reagents are pumped through the reactor and mixed at specific points.

- Advantages for Ketene Synthesis:

  - Superior Heat Transfer: The high surface-area-to-volume ratio of the tubing allows for near-instantaneous and precise temperature control, effectively quenching dimerization.

  - Minimized Residence Time: The ketene can be generated in one reactor coil and immediately mixed with the trapping agent in the next segment. This minimizes the time the free ketene exists, drastically reducing the opportunity for dimerization.[16]

  - Enhanced Safety: The small internal volume of the reactor means only a tiny amount of the reactive intermediate is present at any given moment, which is much safer for handling potentially hazardous reagents like diazoketones.[17][18]

Conceptual Flow Chemistry Setup for Ketene Generation & Trapping

© 2026 BenchChem. All rights reserved.

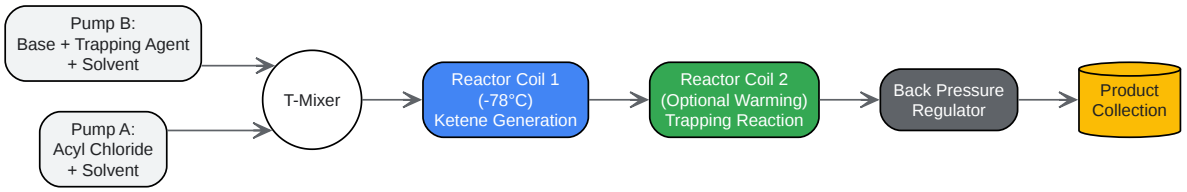

Click to download full resolution via product page

Caption: Conceptual workflow for continuous flow ketene synthesis.

Data Summary: Comparison of Prevention Strategies

The following table provides a qualitative comparison of the effectiveness of different strategies. Quantitative yields are highly substrate-dependent, but the trends are generally applicable.

Strategy	Key Parameter	Impact on Dimerization	Typical Application
Low Temperature	-78 °C	High Reduction	Batch synthesis (Dehydrohalogenation)
Slow Addition	Low concentration	High Reduction	Batch synthesis (Dehydrohalogenation)
Nucleophile as Solvent	High trapping rate	Very High Reduction	Batch synthesis (Wolff Rearrangement)
Continuous Flow	Minimized residence time	Near Elimination	Scale-up, hazardous reagents

References

© 2026 BenchChem. All rights reserved.

- Theoretical Study for the [2+2] Cycloaddition Reaction Mechanism of Ketenes and their Derivatives.Oriental Journal of Chemistry.[Link]
- Wolff rearrangement.Wikipedia.[Link]
- [2+2] Ketene Cycloaddition.ChemTube3D.[Link]
- Photochemical Wolff Rearrangement Initiated Generation and Subsequent α-Chlorination of C1 Ammonium Enolates.Organic Letters.[Link]
- Exploiting the Reactivity of Destabilized Pyrrolylketene for the Stereoselective Synthesis of β-Lactams.MDPI.[Link]
- Ketene (2+2) Cycloaddition Reactions.YouTube.[Link]
- General scheme of the Wolff rearrangement and the subsequent trapping reactions.ResearchGate.[Link]
- Wolff-Rearrangement.Organic Chemistry Portal.[Link]
- Ketene.Wikipedia.[Link]
- 11.5: Wolff Rearrangement.Chemistry LibreTexts.[Link]
- Catalytic, asymmetric reactions of ketenes and ketene enolates.PMC - NIH.[Link]
- Formation and Utility of Reactive Ketene Intermediates Under Continuous Flow Conditions.ACS Publications.[Link]
- Generation of Ketenes from Acid Chlorides Using NaH/Crown Ether Shuttle-Deprotonation for Use in Asymmetric Catalysis.Organic Letters.[Link]
- Ketene from acetyl chloride?Reddit.[Link]
- Formation and utility of reactive ketene intermediates under continuous flow conditions.ORCA - Cardiff University.[Link]

© 2026 BenchChem. All rights reserved.

- Bond formations by intermolecular and intramolecular trappings of acylketenes and their applications in natural product synthesis.PubMed Central.[Link]
- Continuous Flow Generation of Acylketene Intermediates via Nitrogen Extrusion.PubMed.[Link]
- (PDF) Continuous Flow Generation of Acylketene Intermediates via Nitrogen Extrusion.ResearchGate.[Link]
- Dehydrohalogenation of Alkyl Halides Reaction Mechanism - E1 & E2.YouTube.[Link]

Need Custom Synthesis?

BenchChem offers custom synthesis for rare earth carbides and specific isotopiclabeling.

Email: info@benchchem.com or Request Quote Online.

Sources

- 1. chemtube3d.com [chemtube3d.com]
- 2. Ketene - Wikipedia [en.wikipedia.org]
- 3. youtube.com [youtube.com]
- 4. mdpi.com [mdpi.com]
- 5. Wolff-Rearrangement [organic-chemistry.org]
- 6. Catalytic, asymmetric reactions of ketenes and ketene enolates - PMC [pmc.ncbi.nlm.nih.gov]
- 7. reddit.com [reddit.com]
- 8. youtube.com [youtube.com]
- 9. pubs.acs.org [pubs.acs.org]
- 10. Wolff rearrangement - Wikipedia [en.wikipedia.org]
- 11. researchgate.net [researchgate.net]
- 12. chem.libretexts.org [chem.libretexts.org]
- 13. pubs.acs.org [pubs.acs.org]

© 2026 BenchChem. All rights reserved.

- 14. researchgate.net [researchgate.net]
- 15. Formation and utility of reactive ketene intermediates under continuous flow conditions - ORCA [orca.cardiff.ac.uk]
- 16. orca.cardiff.ac.uk [orca.cardiff.ac.uk]
- 17. Continuous Flow Generation of Acylketene Intermediates via Nitrogen Extrusion - PubMed [pubmed.ncbi.nlm.nih.gov]
- 18. researchgate.net [researchgate.net]
- To cite this document: BenchChem. [preventing self-dimerization during ketene synthesis]. BenchChem, [2026]. [Online PDF]. Available at: [https://www.benchchem.com/product/b1598165/docs#preventing-self-dimerization-during-ketene-synthesis]

Disclaimer & Data Validity:

The information provided in this document is for Research Use Only (RUO) and is strictly not intended for diagnostic or therapeutic procedures. While BenchChem strives to provide accurate protocols, we make no warranties, express or implied, regarding the fitness of this product for every specific experimental setup.

Technical Support: The protocols provided are for reference purposes. Unsure if this reagent suits your experiment?

Need Industrial/Bulk Grade? Request Custom Synthesis Quote

BenchChem

Our mission is to be the trusted global source of essential and advanced chemicals, empowering scientists and researchers to drive progress in science and industry.

Contact

Address: 3281 E Guasti Rd

Ontario, CA 91761, United States

Phone: (601) 213-4426

Email: info@benchchem.com

Contact our Ph.D. Support Team for a compatibility check

© 2026 BenchChem. All rights reserved.