Advanced Fabrication Protocol: Solid-Contact Cadmium Ion-Selective Electrode (SC-Cd-ISE)

Author: BenchChem Technical Support Team. **Date**: April 2026

Compound of Interest

Compound Name:	*10-Hydroxydecyl butyrate*
CAS No.:	*80054-63-3*
Cat. No.:	*B1598286*

Get Quote

detection.

Abstract

This Application Note outlines a rigorous protocol for fabricating a Solid-Contact Ion-Selective Electrode (SC-ISE) targeting Cadmium ions (

). Unlike traditional liquid-contact electrodes, this protocol utilizes a nanostructured solid-contact transducer (MWCNT or Conductive Polymer) to eliminate the internal filling solution, enabling miniaturization and robust field application. The sensor relies on the neutral carrier ETH 1062 (Cadmium Ionophore I) embedded in a plasticized PVC matrix, offering high selectivity against interfering ions like

and

.

Part 1: Theoretical Foundation & Mechanism

The Sensing Mechanism

The Cadmium ISE operates on the principle of potentiometric transduction. The potential difference (

) generated at the membrane-sample interface follows the Nernst Equation for a divalent cation:

Where:

- : Standard potential of the system.
- : Gas constant, Temperature, Faraday constant.
- : Activity of cadmium ions in the sample.
- Theoretical Slope: ~29.58 mV/decade at 25°C.

The Solid Contact Transducer

To replace the unstable liquid junction, we employ an Ion-to-Electron Transducer layer between the electronic conductor (Glassy Carbon) and the ionic conductor (PVC Membrane). This layer (e.g., Multi-Walled Carbon Nanotubes - MWCNTs) creates a high double-layer capacitance, stabilizing the potential and minimizing signal drift.

© 2026 BenchChem. All rights reserved.

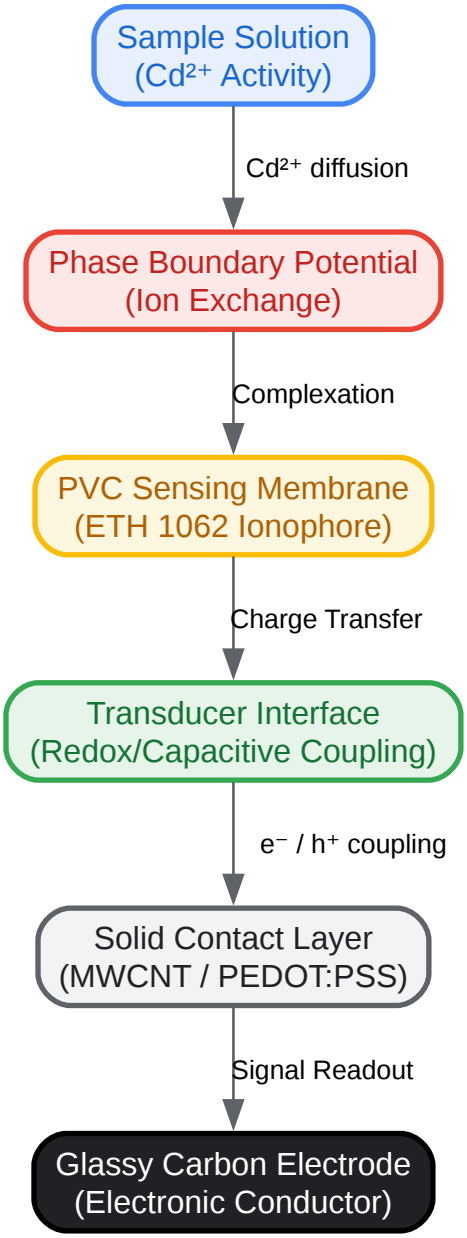

Click to download full resolution via product page

Figure 1: Signal transduction pathway in a Solid-Contact ISE. The transducer layer converts the ionic signal from the membrane into an electronic signal read by the potentiometer.

Part 2: Materials & Reagents[1][2][3][4][5]

Critical Reagents

© 2026 BenchChem. All rights reserved.

Component	Specification	Role	Recommended Source
Ionophore	ETH 1062 (Cadmium Ionophore I)	Selective Carrier	Sigma-Aldrich / Fluka
Polymer Matrix	Poly(vinyl chloride) (High Molecular Weight)	Mechanical Support	Sigma-Aldrich
Plasticizer	o-NPOE (2-Nitrophenyloctyl ether)	Solvent / Dielectric Mediator	Sigma-Aldrich
Ionic Additive	KTpClPB (Potassium tetrakis(4-chlorophenyl)borate)	Anionic sites (Donnan Exclusion)	Sigma-Aldrich
Transducer	MWCNT (>95% Carbon, O.D. 10-20nm)	Ion-to-Electron Transduction	Nanostructured & Amorphous Materials
Solvent	Tetrahydrofuran (THF)	Inhibitor-free, HPLC Grade	Merck/Sigma

Equipment

- Substrate: Glassy Carbon Electrodes (GCE, 3mm diameter).
- Polishing Kit: Alumina powder (1.0, 0.3, 0.05 µm) and polishing cloth.
- Potentiometer: High-impedance input (>10^{13}) multi-channel ion meter.
- Reference Electrode: Double-junction Ag/AgCl (External chamber: 1M LiAc or to prevent leakage precipitation).

© 2026 BenchChem. All rights reserved.

Part 3: Fabrication Protocol

Phase 1: Substrate Preparation

Objective: Create a pristine, electrochemically active surface.

- Polish: Polish the GCE surface sequentially with 1.0, 0.3, and 0.05 µm alumina slurry on a microcloth.
- Sonicate: Rinse with deionized water and sonicate in ethanol for 3 minutes, then in water for 3 minutes to remove debris.
- Dry: Allow to air dry in a dust-free environment.

Phase 2: Transducer Layer Deposition

Objective: Minimize potential drift and water-layer formation.

- Suspension: Disperse 1 mg of MWCNTs in 1 mL of THF. Sonicate for 30 minutes to ensure a homogenous black suspension.
- Drop-Casting: Drop-cast 10 µL of the MWCNT suspension onto the GCE surface.
- Evaporation: Allow the solvent to evaporate completely (approx. 30 mins). The surface should appear matte black.

Phase 3: Membrane Cocktail Preparation

Objective: Formulate the sensing matrix. Precision in weighing is critical.

Prepare a 200 mg batch of the membrane cocktail in a glass vial:

© 2026 BenchChem. All rights reserved.

Component	Weight (mg)	Weight %	Molar Considerations
ETH 1062	2.0 mg	1.0%	Primary Ligand
KTpClPB	1.0 mg	0.5%	~50-60 mol% relative to Ionophore
PVC (High MW)	66.0 mg	33.0%	Matrix
o-NPOE	131.0 mg	65.5%	Plasticizer
Total	200.0 mg	100%	Dissolve in 2.0 mL THF

Note: The additive (KTpClPB) is essential. Without it, the electrode will suffer from high resistance and poor Nernstian response.

Phase 4: Membrane Deposition & Conditioning

- Dissolution: Vortex the cocktail mixture until the PVC is fully dissolved (clear, viscous solution).
- Coating: Drop-cast 50-80 µL of the cocktail over the MWCNT-modified electrode. Apply in 2-3 small aliquots to prevent overflow.
- Curing: Cover with a beaker (to slow evaporation) and let dry for 24 hours at room temperature.
- Conditioning (CRITICAL):
  - Immerse the dry electrode in

    M

    solution for 24 hours.
  - Why? This replaces impurities in the membrane with

    and establishes the phase boundary potential.

© 2026 BenchChem. All rights reserved.

Part 4: Characterization & Quality Control

Calibration Workflow

Calibrate using serial dilutions of

from

M to

M. Maintain constant Ionic Strength using 0.1 M

as a background electrolyte if working in complex media.



Click to download full resolution via product page

Figure 2: Step-wise calibration flow. Measurements should proceed from lowest to highest concentration to minimize memory effects.

Selectivity Coefficients ( )

Determine selectivity using the Separate Solution Method (SSM). Measure the potential in 0.01 M

(

) and 0.01 M Interfering Ion (

).

Target Values (Log K):

- : < -3.0
- : < -6.0[1]
- : < -6.5

© 2026 BenchChem. All rights reserved.

Part 5: Troubleshooting Guide

Symptom	Probable Cause	Corrective Action
Sub-Nernstian Slope (< 25 mV/dec)	Insufficient Ionophore or Leaching	Check cocktail calculation; Re-make membrane. Ensure conditioning time is >24h.
Drift / Instability	Water layer formation between GCE and Membrane	Re-apply Transducer layer (MWCNT/PEDOT). Ensure thorough drying before conditioning.
Slow Response (> 30s)	Membrane too thick or high resistance	Reduce drop-casting volume. Verify Additive (KTpClPB) was included.
Super-Nernstian Slope (> 35 mV/dec)	Anionic interference	Ensure Reference Electrode bridge electrolyte is compatible (use double junction).

References

- Bakker, E., Pretsch, E. (2020). Potentiometric Sensors and Ion-Selective Electrodes.[2][3][4][5] [Link]
- Bobacka, J. (2006). Conducting polymer-based solid-state ion-selective electrodes. [Link]
- Sutter, J., et al. (2004). Solid-Contact Ion-Selective Electrodes: Response Mechanisms and Application. [Link][6][7][8]

Need Custom Synthesis?

BenchChem offers custom synthesis for rare earth carbides and specific isotopiclabeling.

Email: info@benchchem.com or Request Quote Online.

Sources

- 1. sigmaaldrich.com [sigmaaldrich.com]
- 2. pubs.aip.org [pubs.aip.org]
- 3. fishersci.co.uk [fishersci.co.uk]
- 4. researchgate.net [researchgate.net]
- 5. sentek.co.uk [sentek.co.uk]
- 6. researchgate.net [researchgate.net]
- 7. chemmethod.com [chemmethod.com]
- 8. biointerfaceresearch.com [biointerfaceresearch.com]

- To cite this document: BenchChem. [Advanced Fabrication Protocol: Solid-Contact Cadmium Ion-Selective Electrode (SC-Cd-ISE)]. BenchChem, [2026]. [Online PDF]. Available at: [https://www.benchchem.com/product/b1598286/docs#advanced-fabrication-protocol-solid-contact-cadmium-ion-selective-electrode-sc-cd-ise]

Disclaimer & Data Validity:

The information provided in this document is for Research Use Only (RUO) and is strictly not intended for diagnostic or therapeutic procedures. While BenchChem strives to provide accurate protocols, we make no warranties, express or implied, regarding the fitness of this product for every specific experimental setup.

Technical Support: The protocols provided are for reference purposes. Unsure if this reagent suits your experiment?

Need Industrial/Bulk Grade? Request Custom Synthesis Quote

BenchChem

Our mission is to be the trusted global source of essential and advanced chemicals, empowering scientists and researchers to drive progress in science and industry.

Contact

Address: 3281 E Guasti Rd

Ontario, CA 91761, United States

Phone: (601) 213-4426

Email: info@benchchem.com

© 2026 BenchChem. All rights reserved.

Contact our Ph.D. Support Team for a compatibility check

© 2026 BenchChem. All rights reserved.