Foreword: Navigating the Landscape of Perfluorinated Amines

Author: BenchChem Technical Support Team. **Date**: May 2026

Compound of Interest

Compound Name:	*Perfluoromethyldiethylamine*
CAS No.:	*758-48-5*
Cat. No.:	*B1596663*

Get Quote

Perfluoromethyldiethylamine, a fully fluorinated tertiary amine, represents a class of compounds that defy conventional amine chemistry. Their unique properties, born from the complete substitution of hydrogen with fluorine, render them exceptionally stable and inert. This guide is designed for researchers, chemists, and drug development professionals who seek a deeper understanding of this fascinating molecule. We will move beyond a simple recitation of facts to explore the causality behind its behavior, offering not just data, but insight. In the spirit of scientific integrity, this document will also transparently address the current limitations in publicly available data and provide generalized, field-proven protocols where specific examples are not available.

Molecular Identity and Physicochemical Characteristics

Perfluoromethyldiethylamine is a tertiary perfluorinated amine where a central nitrogen atom is bonded to one trifluoromethyl ($-CF_3$) group and two pentafluoroethyl ($-C_2F_5$) groups.[1] This structure is fundamental to all of its observed properties.

Caption: Molecular structure of **Perfluoromethyldiethylamine** ($C_5F_{13}N$).

© 2026 BenchChem. All rights reserved.

The complete fluorination dramatically alters the electronic environment of the nitrogen atom. Unlike hydrocarbon amines, where the nitrogen lone pair is readily available, in perfluorinated amines, the immense electron-withdrawing power of the surrounding fluorine atoms effectively sequesters this lone pair, rendering the molecule non-basic and chemically inert under most conditions.[1]

Table 1: Core Physicochemical Properties

Property	Value	Source
IUPAC Name	1,1,2,2,2-Pentafluoro-N-(pentafluoroethyl)-N-(trifluoromethyl)ethan-1-amine	[1][2]
CAS Number	758-48-5	[1][2]
Molecular Formula	$C_5F_{13}N$	[1][2]
Molecular Weight	321.04 g/mol	[1]
Appearance	Colorless liquid	[1]
Boiling Point	45–47 °C	[1]
Density	1.79 g/mL at 25 °C	[1]
Refractive Index	1.25 at 25 °C	[1]

Synthesis via Electrochemical Fluorination (Simons Process)

The industrial production of **perfluoromethyldiethylamine** relies on a robust technique known as the Simons Process of Electrochemical Fluorination (ECF). This method is foundational for producing a wide range of perfluorinated compounds.[3] The causality is straightforward: direct fluorination with F_2 gas is dangerously exothermic and difficult to control, leading to significant C-C bond cleavage. ECF provides a more controlled, albeit lower-yield, pathway.

The process involves the electrolysis of a solution of the parent amine (methyldiethylamine) in anhydrous hydrogen fluoride (aHF).[3] A nickel anode is typically used, as it forms a

© 2026 BenchChem. All rights reserved.

passivating layer of nickel fluoride that facilitates the reaction.[4]

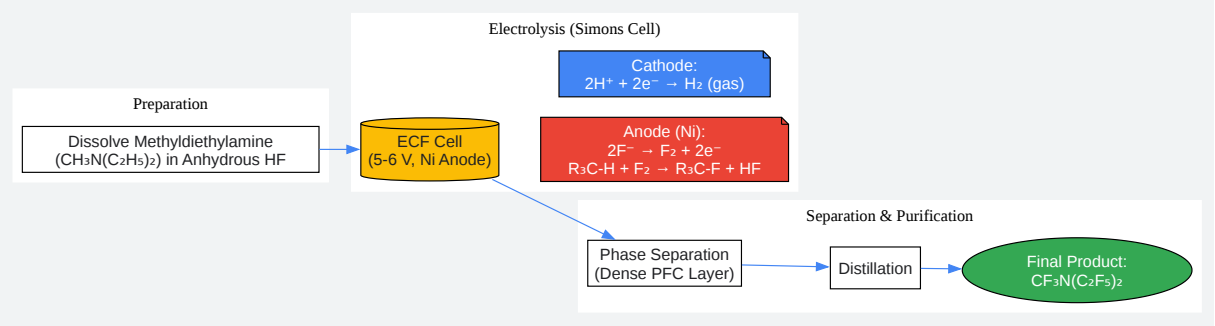

Click to download full resolution via product page

Caption: Generalized workflow for the Simons Electrochemical Fluorination process.

Generalized Experimental Protocol for ECF

Note: This is a generalized protocol. The handling of anhydrous hydrogen fluoride requires specialized equipment and extreme safety precautions.

- Cell Preparation: A purpose-built ECF cell, typically constructed from Monel or another HF-resistant alloy, containing a pack of alternating nickel anodes and cathodes is dried meticulously.
- Electrolyte Preparation: Anhydrous hydrogen fluoride (aHF) is condensed into the cell at low temperature.
- Substrate Introduction: The organic precursor, methyldiethylamine, is slowly introduced into the aHF to create a solution of the desired concentration (e.g., 5-10% by weight). The amine starting material must be highly pure to prevent side reactions.

© 2026 BenchChem. All rights reserved.

- Electrolysis: A direct current is applied to the cell, maintaining a potential of 5-6 V.[3] The temperature is controlled, often near 0 °C, to manage heat generated by the cell's resistance. Gaseous hydrogen evolves at the cathode and is safely vented.
- Product Collection: The perfluorinated product is significantly denser than the aHF electrolyte and immiscible with it. It collects at the bottom of the cell and can be drained off periodically.
- Purification: The crude product is washed with water to remove residual HF, treated with a mild base to neutralize any remaining acidity, dried, and purified by fractional distillation.

Spectroscopic Characterization

Disclaimer: Publicly available, experimentally verified spectra for **perfluoromethyldiethylamine** are scarce. The following sections are based on established principles of spectroscopy for fluorinated compounds and provide predicted data for illustrative purposes.

^{19}F Nuclear Magnetic Resonance (NMR) Spectroscopy

^{19}F NMR is an exceptionally powerful tool for analyzing fluorinated molecules due to the 100% natural abundance and high gyromagnetic ratio of the ^{19}F nucleus.[5] It offers a very wide chemical shift range, which typically leads to well-resolved spectra even for complex molecules.[6]

For **perfluoromethyldiethylamine**, we would expect two distinct signals corresponding to the two electronic environments: the trifluoromethyl (-CF_3) group and the pentafluoroethyl (-C_2F_5) groups. The -C_2F_5 group itself will show two signals for the -CF_2- and -CF_3 moieties, with characteristic coupling.

Predicted ^{19}F NMR Spectrum:

© 2026 BenchChem. All rights reserved.

Predicted Chemical Shift (δ, ppm vs $CFCl_3$)	Assignment	Multiplicity	Rationale
~ -65 to -75	N-CF_3	Singlet	Typical range for a CF_3 group attached to a nitrogen.[5]
~ -80 to -90	N-CF_2-CF_3	Triplet	The terminal CF_3 of the ethyl group is split by the adjacent CF_2.
~ -110 to -130	N-CF_2-CF_3	Quartet	The CF_2 group is split by the adjacent CF_3.

Protocol for ^{19}F NMR Data Acquisition

- Sample Preparation: Dissolve ~5-10 mg of **perfluoromethyldiethylamine** in ~0.6 mL of a deuterated solvent (e.g., $CDCl_3$ or Acetone-d_6) in a standard 5 mm NMR tube. A small amount of a reference standard, such as trichlorofluoromethane ($CFCl_3$), can be added if not using an internal spectrometer reference.
- Instrument Setup:
  - Use a high-field NMR spectrometer equipped with a broadband or fluorine-specific probe.
  - Tune and match the probe for the ^{19}F frequency.
  - Lock the spectrometer on the deuterium signal of the solvent.
  - Shim the magnetic field to achieve optimal homogeneity.
- Acquisition:
  - Acquire a standard one-pulse ^{19}F spectrum.
  - Key parameters to set include the spectral width (e.g., -250 to 50 ppm to cover the full range of organofluorine compounds), acquisition time (~1-2 seconds), and relaxation delay (e.g., 5 seconds for quantitative analysis).

© 2026 BenchChem. All rights reserved.

- Collect a sufficient number of scans (e.g., 16 or 64) to achieve a good signal-to-noise ratio.

- Processing:
  - Apply a Fourier transform to the acquired Free Induction Decay (FID).
  - Phase correct the spectrum.
  - Reference the chemical shift axis to $CFCl_3$ at 0.0 ppm.
  - Integrate the signals to determine the relative ratios of the different fluorine environments.

Mass Spectrometry (MS)

Electron Ionization Mass Spectrometry (EI-MS) is a standard method for determining the molecular weight and fragmentation pattern of volatile compounds. Perfluorinated compounds are known for their characteristic fragmentation patterns, often involving the cleavage of C-C and C-N bonds.

Predicted Key Mass Fragments:

© 2026 BenchChem. All rights reserved.

m/z	Plausible Fragment	Formula	Notes
321	$[M]^+$	$[C_5F_{13}N]^+$	Molecular ion; may be weak or absent.
302	$[M-F]^+$	$[C_5F_{12}N]^+$	Loss of a fluorine atom.
252	$[M-CF_3]^+$	$[C_4F_{10}N]^+$	Loss of the trifluoromethyl group.
202	$[M-C_2F_5]^+$	$[C_3F_8N]^+$	Loss of a pentafluoroethyl group.
119	$[C_2F_5]^+$	$[C_2F_5]^+$	Pentafluoroethyl cation; likely a prominent peak.
69	$[CF_3]^+$	$[CF_3]^+$	Trifluoromethyl cation; often the base peak.

Applications and Utility

The unique combination of chemical inertness, thermal stability, low viscosity, and high gas solubility makes **perfluoromethyldiethylamine** valuable in specialized, high-performance applications.

- Heat Transfer Fluids: It is a component of Fluorinert™ electronic liquids.[1] In this role, it is used for direct immersion cooling of high-power electronics, such as CPUs and in semiconductor manufacturing, where its high dielectric strength and chemical inertness prevent short circuits and corrosion.[1]

- Biomedical Applications: Perfluorinated amines have been extensively researched as components of "artificial blood" or oxygen therapeutics, such as Fluosol™.[1] This application leverages the remarkably high solubility of gases like O_2 and CO_2 in the liquid, allowing it to function as an oxygen transport medium. Its low toxicity is a critical prerequisite for such use.[1]

© 2026 BenchChem. All rights reserved.

Safety and Handling

Crucial Note: A specific, verified Safety Data Sheet (SDS) for **perfluoromethyldiethylamine** (CAS 758-48-5) is not readily available in public databases. While perfluoroalkylamines are generally reported to have very low toxicity, this should not lead to complacency.[1] The following guidelines are based on prudent laboratory practices for handling per- and polyfluoroalkyl substances (PFAS) in general.

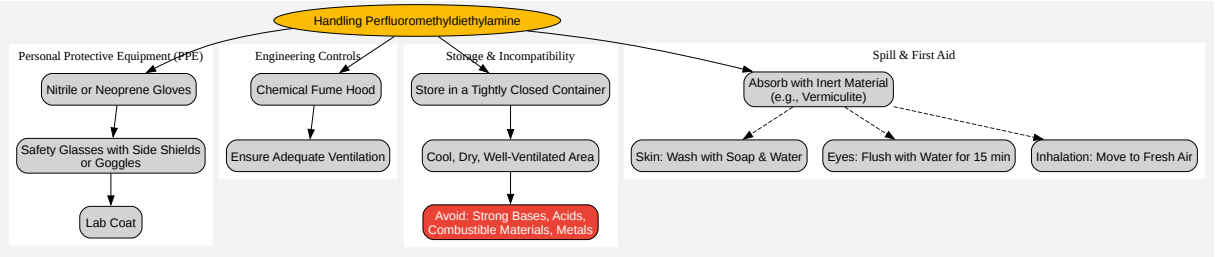

Click to download full resolution via product page

Caption: Prudent safety workflow for handling perfluorinated compounds.

Prudent Laboratory Practices

- Ventilation: Always handle the compound within a certified chemical fume hood to prevent inhalation of vapors.
- Personal Protective Equipment (PPE): Wear standard laboratory attire, including a lab coat, nitrile or neoprene gloves, and chemical safety goggles.

© 2026 BenchChem. All rights reserved.

- Storage: Store in a tightly sealed container in a cool, dry, well-ventilated area away from incompatible materials.
- Incompatibilities: Although generally inert, avoid contact with strong bases, acids, reactive metals (like alkali metals), and combustible materials, especially at elevated temperatures.
- Disposal: Dispose of waste material in accordance with all local, regional, and national regulations for halogenated organic compounds.

Conclusion

Perfluoromethyldiethylamine stands as a testament to the transformative power of fluorine chemistry. Its properties—dominated by extreme chemical inertness, non-basicity, and thermal stability—are a direct consequence of its perfluorinated structure. While its primary applications in electronics cooling and biomedical research are well-established, the ongoing exploration of fluorinated molecules in materials science and pharmaceuticals suggests that a thorough understanding of such foundational compounds remains critical. Future research should aim to fill the existing gaps in public data, particularly regarding comprehensive toxicological profiles and detailed reaction chemistry under extreme conditions, to enable even broader and safer application.

References

- Grokipedia. **Perfluoromethyldiethylamine**. [Link]
- Wikipedia. Electrochemical fluorination. [Link]
- PubChem. **Perfluoromethyldiethylamine** | C5F13N | CID 136571. National Institutes of Health. [Link]
- ResearchGate. Electrochemical Fluorination. [Link]
- Wikipedia. Fluorine-19 nuclear magnetic resonance spectroscopy. [Link]
- Gerig, J. T. Fluorine NMR. University of California, Santa Barbara. [Link]

© 2026 BenchChem. All rights reserved.

Need Custom Synthesis?

BenchChem offers custom synthesis for rare earth carbides and specific isotopiclabeling.

Email: info@benchchem.com or Request Quote Online.

Sources

- 1. grokipedia.com [grokipedia.com]
- 2. Perfluoromethyldiethylamine | C5F13N | CID 136571 - PubChem [pubchem.ncbi.nlm.nih.gov]
- 3. Electrochemical fluorination - Wikipedia [en.wikipedia.org]
- 4. researchgate.net [researchgate.net]
- 5. Fluorine-19 nuclear magnetic resonance spectroscopy - Wikipedia [en.wikipedia.org]
- 6. biophysics.org [biophysics.org]
- To cite this document: BenchChem. [Foreword: Navigating the Landscape of Perfluorinated Amines]. BenchChem, [2026]. [Online PDF]. Available at: [https://www.benchchem.com/product/b1596663/docs#foreword-navigating-the-landscape-of-perfluorinated-amines]

Disclaimer & Data Validity:

The information provided in this document is for Research Use Only (RUO) and is strictly not intended for diagnostic or therapeutic procedures. While BenchChem strives to provide accurate protocols, we make no warranties, express or implied, regarding the fitness of this product for every specific experimental setup.

Technical Support: The protocols provided are for reference purposes. Unsure if this reagent suits your experiment?

Need Industrial/Bulk Grade? Request Custom Synthesis Quote

© 2026 BenchChem. All rights reserved.

BenchChem

Our mission is to be the trusted global source of essential and advanced chemicals, empowering scientists and researchers to drive progress in science and industry.

Contact

Address: 3281 E Guasti Rd

Ontario, CA 91761, United States

Phone: (601) 213-4426

Email: info@benchchem.com

Contact our Ph.D. Support Team for a compatibility check

© 2026 BenchChem. All rights reserved.